CITY OF POLSON

STANDARDS FOR DESIGN & CONSTUCTION

INTRODUCTION

These City of Polson Standards for Design & Construction, hereinafter referred to as the "Standards Manual" shall establish the minimum requirements for construction and/or upgrading of facilities both in the public right-of-way and for private development; transportation and transportation related facilities; storm drainage facilities; sanitary sewer and water improvements; and park, recreation, and open space facilities. The standards contained in this document apply whenever any public or private work is performed within the public right-of-way or public easement of the City of Polson including work performed by private parties at their own expense under authority granted by ordinance of the City Council or permit process of the Public Works Department. This manual is therefore to be used as a resource by City staff, citizens, developers, contractors, and design professionals.

It is the goal of the City to foster consistent and acceptable construction. In the furtherance of that goal, these standards are based upon and implement city, state, and national ordinances, plans, policies, and codes.

Good design of projects is also a goal of the City. Since these standards cannot anticipate all situations, compliance with these standards does not relieve the designer, property owner, or contractor of the responsibility to apply conservative and sound professional judgment to protect the health, safety, and welfare of the public. These are minimum standards and are intended to assist, but not to substitute for, competent work by design professionals. Special considerations or environmental constraints may require more intense or rigorous design parameters than would be otherwise required. City staff is therefore expected to use professional judgment in requiring more than these minimum standards under circumstances where implementation of the standards contained in this document would not satisfy the needs of special conditions or environmental constraints.

Note that it is not the intent of the City to unreasonably limit any innovative or creative effort that could result in a superior design based upon the performance criteria of safety, economical maintenance, and pleasant appearance.

Proposed departures from these standards by the developer will be evaluated by City staff on the basis that the proposal will produce acceptable results for the user, the environment, and the public.

STANDARDS FOR DESIGN & CONSTRUCTION

SECTION I

GENERAL PROVISIONS **Page Number**

GP-01 Definition of Terms ……..... I-7

GP-02 Applicability …….……..……. I-7

GP-03 Severability ……..……...……..... I-7

GP-04 Standards ……...…….....….I-7

GP-05 General Policy Utilities …….……..... I-7

GP-06 City Fees ……...….. I-8

GP-07 Applicable Laws & Indemnification of City …….……..……...……. I-8

GP-08 Interruption of Service …….….……... I-8

GP-09 Traffic & Pedestrian Control …..... I-9

GP-10 Protection of Property & Utilities …….…..…. I-9

GP-11 Liability Insurance & Performance Bonding ……..……...…….I-10

GP-12 Project Acceptance for New Infrastructure & Maintenance Bond ….……..……..I-10

GP-13 Excavation & Disposal of Material from Existing Public Right-of-Way & Easement ……..……...…. I-11

GP-14 Survey Monumentation ……..……...…. I-11

GP-15 Pollution Controls ……..… I-11

GP-16 Pavement Restoration …….……...… I-12

GP-17 Construction Control ……..…... I-12

GP-18 Plan Review ……..…….……..….. I-13

GP-19 Construction Inspection …….……... I-14

GP-20 Guarantee for Equipment, Material, & Workmanship for Maintenance Repairs ..…... I-14

GP-21 Stop Work Order ……...……..……... I-14

GP-22 Relocation of Utilities …… I-14

GP-23 Asbestos Control ……...……. I-15

GP-24 Landscaping ……... I-15

GP-25 Utility Easements…….…….……...……..…… I-15

SECTION II

DESIGN STANDARDS **Page Number**

DS-01 Design & Development Requirements II-16
DS-02 Water Systems II-17
DS-03 Sanitary Sewer Systems II-19
DS-04 Storm Drainage Systems II-22
DS-05 Roadways and Walkways II-23
DS-06 Driveways II-25
DS-07 Placement of Utilities II-26

SECTION III

STORMWATER MANAGEMENT STANDARDS

SM-01 Objective & Purpose ……..……...…....… III-27
SM-02 General Requirements …….....…… III-27
SM-03 Core Requirements …….…… III-28
SM-04 Regulatory Threshold …….…….……... III-28
SM-05 New Development ……..…… III-28
SM-06 Redevelopment ……...……..... III-28
SM-07 Design Deviation …… III-29
SM-08 Core Requirement #1 – Drainage Submittal …...……...……...…. III-29
SM-09 Core Requirement #2 – Geotechnical Site Investigation ……..…. III-31
SM-10 Core Requirement #3 – Stormwater Control Facilities ……..…… III-32
SM-11 Core Requirement #4 – Natural & Constructed Conveyance Systems ……..… III-33
SM-12 Core Requirement #5 – Operation & Maintenance ……...…. III-34

SECTION IV

STORMWATER FACILITIES MAINTENANCE, PARCELS, & EASEMENTS

MA-01 Maintenance ……...……...… IV-35
MA-02 Parcels & Easements ……...…….. IV-37

SECTION V

CONSTRUCTION STANDARDS

Page Number

CS-01 Project Requirements V-39

CS-02 Construction Standards V-39

CS-03 Site Maintenance V-40

CS-04 Water & Sewer Service Construction V-40

CS-05 Construction Inspection, Testing, & Quality Control V-40

CS-06 Record Drawings and Project Acceptance V-41

CS-07 One Year Guarantee Inspection …… V-42

CS-08 Boulevard Landscaping …….…... V-42

CS-09 Protection of Trees ……..…. V-43

SECTION VI

STANDARD DRAWINGS

SD-00 Arterial Street

SD-01 Collector Street

SD-02 Local Street

SD-03 Rural Road

SD-04 Alley Apron

SD-05 Curb & Gutter

SD-06 Drive Over Curb & Gutter

SD-07 Straight Curb

SD-08 Sidewalk

SD-09 Vehicle Tracking Control

SD-10 Sewer Service Connection

SD-11 Water Service Line

SD-12 2” Blow-Off Detail

SD-13 Dry Utility Trench

SD-14 Valley Gutter

SD-15 Standard Manhole Detail

SD-16 Inlet & Grate

SD-17 Street Signs

SD-18 Cul-de-Sac

SD-19 Temporary Cul-de-Sac

SD-20 Hammerhead Turnaround

SD-21 Beveled End Pipe Section

SD-22 Shoulder and Ditch Section Driveway

SD-23 Location and Width of New Driveway

SD-24 Sidewalk Transition to Asphalt Shoulder

SD-25 Street Tree Location

SD-26 Tree Planting Detail

SD-27 Locking Manhole Cover

SD-28 Locking Manhole Frame

SD-29 Type ‘A’ Curb Ramp

SD-30 Type ‘A’ Ramp

SD-31 Type ‘D’ Ramp Mod. 1

SD-32 Type ‘D’ Ramp Mod. 2

SECTION I

GENERAL PROVISIONS

GP-01 Definition of Terms

Work and phrases in these Standards have the same meaning as those in the Polson Development Code (PDC) and the Montana Public Works Standard Specifications. If it is determined that terms are conflicting or unclear, the Public Works Director will clarify the intended meaning and intent. These standards may be modified for exceptional cases if approved by the Public Works Director, or if the City Council authorizes a variance.

GP-02 Applicability

These standards shall apply whenever any public or private work is performed within the street rights-of-way or public easement of the City of Polson including work performed by private parties at their own expense under authority granted by ordinance of the City Council or permit process of the Public Works Department.

GP-03 Severability

If any section, sentence, clause, or phrase in these standards should be held invalid or unconstitutional the validity of constitutionality thereof shall not affect the validity or constitutionality of any other section, sentences, clause, or phrase of these standards.

GP-04 Standards

1. The latest published edition of the Montana Public Works Standard Specifications are adopted in their entirety, except as amended by the latest edition of the City of Polson Standards Manual. With respect to the design and/or construction of public facilities, any conflict(s) or difference(s) between the Montana Public Works Standard Specifications, the City of Polson Development Code, and the City of Polson Standards Manual shall be resolved in favor of the City of Polson Development Code.

2. The most current edition of the rules and regulations of the Montana Department of Environmental Quality shall also be applicable.

GP-05 General Policy Utilities

Construction of Water Improvements: All development within City jurisdictional boundaries shall be served by the City water system. Developers are required to extend the existing system across the full frontage of the property being developed and upon approval of construction, convey or deed the system so constructed to the City. Joint participation by the City may be applicable where over-sizing is deemed appropriate by the Public Works Director/City Engineer. City approval is required prior to construction.

Construction of Sewer Sanitary Improvements: All development within the City jurisdictional boundaries shall be served by the City sewer system. Developers are required to extend the existing

system (to make services available for future development) across the full frontage of the property and upon approval of construction, convey or deed the system so constructed to the City. Joint participation by the City may be applicable where over-sizing is deemed appropriate by the Public Works Director/City Engineer. City approval is required prior to construction.

Construction of Street Improvements: All street and sidewalk improvements constructed within the City shall be deeded to the City and become public right-of-way.

GP-06 City Fees

Water and Sewer Service Connection Fee: A fee shall be paid, in accordance with the Polson Water and Sewer Rate Schedules available from the Public Works Department water billing office, for the connection of each new water or sewer service to the system. This fee must be paid even though a service line has previously been stubbed to the property line or other point. Connection fees for water and or sewer must be paid before a Building Permit will be issued by the Building Department.

Review Fee: A fee defined in the City of Polson District Rules and Regulations Resolution #942 shall be paid to the City for the review of design reports, construction drawings, and specifications as required in this Standards Manual.

Impact Fees and Other Fees: Other fees may be required per City Ordinance #624, or as subsequently amended and Resolution #938 or as subsequently amended, dependent upon the project requirements.

GP-07 Applicable Laws & Indemnification of City

The Contractor shall give all notices and comply with all federal, state and local laws, ordinances and regulations affecting the conduct of the work, and shall indemnify and hold harmless the City against any claim or liability arising from, or based on, the violation of any such law, ordinance, regulation, etc., whether by himself or his employees.

GP-08 Interruption of Service

Any construction that will interrupt the normal operation of City sewer, water, storm drainage, or transportation facilities requires notification of affected City departments, and property owners and/or residents. The Contractor shall notify the Polson City Police and Fire Departments at least two (2) business days prior to any street closures. All street closures or interruptions of utility services will require the Contractor to provide a news release specifying the location of construction and the duration of the closure. The Contractor shall provide the news release to the news media for publication at least two (2) business days prior to the beginning of any construction activity. The Contractor shall also notify utility users affected by the interruption of the type and duration of the interruption at least two (2) business days prior to beginning construction. In the event of an emergency interruption, the Contractor shall notify the Public Works, Police, and Fire Departments as quickly as possible. The Contractor shall immediately dispatch members of their staff to notify affected individuals by telephone or personal contact.

GP-09 Traffic & Pedestrian Control

A Traffic and Pedestrian Control Plan shall be submitted and approved by the Public Works Department for all work within the public right-of-way. The latest edition of the Manual on Uniform Traffic Control Devices (MUTCD) shall be followed to create the Plan. The location and description of all Traffic and Pedestrian Control Devices shall be shown on the plan. All signs, except "Stop" signs, shall comply with the MUTCD for size, type, placement, material and reflectivity. "Stop" signs shall be thirty (30") inches. The plan must be approved prior to beginning construction. If the required devices are not in place, the Contractor will not be allowed to begin work on the project. All devices shall be kept in place and maintained in good visible condition throughout the project. The Public Works Department reserves the right to reject any device observed to be in substandard condition. Emergency access to the work area shall be maintained at all times.

All barricades and obstructions shall be protected at night by suitable signal lights which shall be kept illuminated from sunset to sunrise. Barricades shall be of substantial construction and shall be constructed to increase their visibility at night. Suitable warning signs shall be placed and illuminated at night to show in advance where construction, barricades or detours exist.

If flagging is required it shall be accomplished by competent and properly equipped flag persons. Flagging shall be accomplished as described in the Montana Department of Transportation Flagger's Handbook and the MUTCD.

Traffic control devices shall be removed from visual contact with the traveling public when they are not being used for the construction activities. The Contractor shall remove all traffic and pedestrian control devices within twenty-four (24) hours of the conclusion of the project construction.

If the Contractor fails to maintain the Traffic and Pedestrian Control Devices in accordance with the approved plan, the City reserves the right to correct the deficiency and all labor, equipment, material and administrative costs will be billed to the Contractor.

GP-10 Protection of Property & Utilities

Property: The Contractor shall protect and preserve from damage, interference, and destruction all private and public property on or in the vicinity of the work. If such property is damaged or destroyed or its use interfered with by the Contractor or his agent, it shall be restored to its former condition by the contractor at their expense and such interference terminated.

Utilities: All Contractors/Developers shall protect from damage private and public utilities, including but not limited to telephone lines, power lines, natural gas lines, sewer, storm, and water lines, irrigation canals and appurtenances, highway lighting and signal systems, and similar facilities. Before beginning any excavation, the contractor shall provide notice of commencement to all owners of underground facilities through the one number locator service, phone number 1-800-424-5555. Such notice shall not be less than two (2) and no more than ten (10) business days before the scheduled date of excavation.

GP-11 Liability Insurance & Bonding

Liability Insurance for Work Within Public Right-of-Way and/or Easement; The Contractor shall procure and maintain, at the Contractor's expense, during the construction period, Contractor's Liability Insurance in accordance with the Supplementary Conditions to the General Conditions of the Montana Public Works Standard Specifications.

Performance: All construction work within the public right-of-way or easement (sidewalk and curb construction, storm drainage and sanitary sewer service line installation, repair, etc.) will require the Property Owner/Contractor to provide the City with a Performance Bond. The bond shall be equal to the value of the project and shall remain in force until the project is accepted by the City Bonds may be in the form of a Surety Bond, a Certificate of Deposit (CD), a Certified Check or an irrevocable Letter of Credit issued by a bank licensed to do business in the state of Montana.

GP-12 Project Acceptance of New Infrastructure & Maintenance Bond

Upon completion of the construction work, the applicant will notify the Public Works Director and request an inspection. The Public Works Director will schedule the inspection, than provide the applicant with a list of deficiencies (punch list) which must be corrected within thirty (30) calendar days. Upon completion of the punch list, the applicant will again notify the Public Works Director who will then schedule a final inspection.

After all deficiencies have been corrected, the applicant will be asked to provide the following:

1. Certified "as-built" reproducible drawings.
2. Certified statement of the full cost of the project using Public Works Cost Statement.
3. A copy of all required easements which have been recorded at the County Courthouse.
4. The Deed of Conveyance for all project improvements which are to be accepted by the City for maintenance.
5. Facilities Check List found in section CS-06 Record Drawings & Project Acceptance

Upon receipt of all the above and payment of all fees, the City Council will accept the project on behalf of the City in accordance with PDC, Appendix G, and authorize the reduction of the financial security to ten (10%) percent of the actual project cost to protect the City against defects in materials and workmanship in the project.

This Maintenance Bond shall remain in effect for one year following the project's acceptance.

Prior to one (1) year following project acceptance the City will conduct an end of maintenance period inspection and develop a list of deficiencies not less than sixty (60) days prior to the expiration of the Maintenance Bond. Once submitted, the applicant will be given thirty (30) days to correct the deficiencies. After all deficiencies are corrected, the financial security will be released.

The City expressly reserves the right to draft the Bond for repairs not completed by the Property Owner, Developer, or Contractor within thirty (30) calendar days of being advised that repairs are required.

GP-13 Excavation & Disposal of Material from Existing Public Right-of-Way & Easement

All material unsuitable for trench backfill, sub-base or base construction, excavated from the developed public right-of-way or easement shall be removed from the site and disposed of by the Contractor. The disposal site shall meet regulatory provisions for disposal of the unsuitable excavated material. Unsuitable excavated material shall not be stockpiled on site. Excavated material shall be confined to the work zone as established during the preconstruction conference or as shown in the contract documents. The Contractor shall be responsible for damages to City infrastructure within the public street right-of-way.

GP-14 Survey Monumentation

When a street is to be reconstructed, prior to any excavation, a thorough search shall be made for existing intersection monuments. If found, such monuments shall be perpetuated by standard survey methods including referencing to at least three (3) accessories such as a chiseled "x" on a storm drain hood, fire hydrant base bolt, fire hydrant operating nut, drilled hole in curb, or property pin.

Monumentation: Monuments shall be a minimum 5/8" diameter rebar or drivable metal rod, at least 18" long. The monument shall be capped with a brass or aluminum cap identifying the responsible land surveyor with name and number. The cap shall be recessed at least 1/8" below the final asphalt surface. Monument risers w/lids of the same type as city water valves (six inches inner diameter) may be used. The City will provide a riser and lid if given a minimum of three (3) days notice prior to setting if stocks are available. The monument must fall within City limits.

GP-15 Pollution Controls

Air: The Contractor shall be responsible to maintain the construction site and all haul routes in accordance with the requirements of the City of Polson. When the area to be disturbed is greater than 4,000 square feet, a plan for the control of dust and dirt during construction to avoid the introduction of particulate matter into the air shall be developed using water and other methods. Said plan shall be provided to the Public Works Department prior to start of construction.

Water: Runoff containing sediment shall not be permitted to flow off of any construction site. Sediment shall not be discharged into storm drainage systems, waterways, or wetlands. The Montana Pollutant Discharge Elimination System regulations require a Storm Water Discharge Permit for construction activity which results in the "disturbance" of equal to or greater than one acre of total land area will need to obtain permit coverage under the **General Permit for Storm Water Discharges Associated with Construction Activity** (called "General Permit"). Construction activity includes the disturbance of less than one acre of total land area that is part of a "larger common plan of development of sale" if the larger common plan will ultimately disturb one acre of more *(such as subdivision with phased work over years*). A Storm Water Erosion and Sediment Control Plan must be approved by the Montana Department of Environmental Quality prior to construction. A copy of the approved Storm Water Erosion and Sediment Control Plan shall be provided to the Public Works Department. For all developments, the Submitting Engineer shall indicate on the plans the types and locations of the temporary erosion and sedimentation BMP's best management practices to be used. These plans shall be a guide for the Contractor who shall adjust BMP's on the site as field conditions and construction

activities warrant. The Contractor shall provide and maintain all necessary erosion and sedimentation BMP's. The BMP's shall not be removed until all roadways have been paved and a permanent and stable vegetative cover has been established. If the Contractor fails to prevent sediment laden water from leaving the site, the City reserves the right to clean and remove sediment from affected waterways and all labor, equipment, material, and administrative costs will be billed to the Contractor.

Roadways: All construction and/or building site approaches onto public roadways shall have a vehicle tracking control approach as illustrated in Standard Drawing SD-09. All vehicles entering and exiting the site shall do so on the tracking control approach. If such an approach becomes ineffective, additional rock will be required. All public roadways shall be kept free of mud and dirt during construction or other erosion control measures. If the contractor fails to keep public roadways free of mud and dirt, the City reserves the right to clean the roadway and all labor, equipment, material, and administrative costs will be billed to the contractor.

GP-16 Pavement Restoration

The Contractor shall be responsible for pavement replacement. The Contractor shall restore all surfaces within thirty (30) calendar days after first opening the trench.

The pavement restoration shall be in accordance with Standard Drawing SD-00 through SD-03. All excavations within thirty-six (36) inches of the edge of the asphalt shall require removal and replacement from the edge of asphalt to the excavation edge. Asphalt patch areas that fill within the wheel path of the vehicular travel lane shall be increased in size to the center of the lane or adjacent lane. In no circumstance will the edge of a patch area be allowed to fill within the wheel path. Any damage to the existing asphalt surface caused by the Contractor's operations shall be repaired at the expense of the Contractor, including but not limited to gouges, scrapes, outrigger marks, backhoe bucket marks, etc. A slurry seal type covering will be considered the minimum repair. The Contractor shall be responsible for maintaining the area in a smooth and drivable condition until the permanent pavement is placed. If the ground is frozen, the road cut shall be temporarily repaired with a minimum thickness of two (2) inches of cold patch material. The temporary repair shall be maintained by the Contractor for safe winter usage. The permanent restoration shall be made as soon as the ground is thawed in the spring, or as directed by the Public Works Department. Pavement repairs shall be in accordance with the Standards Manual.

If the Contractor fails to restore the pavement within the thirty (30) calendar day period, or fails to maintain the trench or area as required, the City reserves the right to complete the restoration or maintenance, and all labor, equipment, material, and administrative costs will be billed to the Contractor.

GP-17 Construction Control

A. Work performed for the construction or improvement of City streets and utilities whether by or for a private developer or by a City contractor, shall be done to the satisfaction of the City and in accordance with approved plans. It is emphasized that no work shall be started until such plans are approved and the required bonds posted. Any revision to such plans shall be approved by the Public Works Director before being implemented. Failure to receive the City's approval prior to construction can result in

removal or modification of construction at the expense of the Contractor or Developer to bring it into conformance with approved plans.

B. The City reserves the right to reject any installation not inspected and approved by the Public Works Director or their designate.

C. Upon satisfactory completion of all required tests and acceptance of a main extension, the City will allow the extension to be connected to the City system.

D. No water main extension shall be energized except for test purposes or sewer mains connected to the existing system until the new extension has been accepted by the City and all fees and charges have been paid.

GP-18 Plan Review

Submittal. All developments, including single family residences, shall submit plans and information as required to show compliance with the PDC and this Standards Manual. Applicant shall submit three (3) copies of the required information.

Documents provided should include at a minimum:

1. A summary of the project intent and location
2. Name, mailing address, and phone number of the owner and owners representative
3. Operation requirements, where applicable
4. General layout
5. Design report in accordance with Montana DEQ Circulars
6. Detailed plans in accordance with Montana DEQ Circulars
7. Specifications in accordance with Montana DEQ Circulars

The design report shall address at a minimum the following as well as other information pertinent for review and approval of the submittal.

1. A description of anticipated build out (occupancy) rate
2. Site conditions (geologic conditions, soil, groundwater, existing facilities, ect.)
3. Anticipated water demand (average, maximum, and fire flow)
4. Hydraulic analysis of the project area (projects requiring water modeling by DEQ to determine impact to the City system will be completed by the City Public Works Department and paid for as part of the review fees)
5. Anticipated sewer flow (average, maximum, peak hourly, and peak instantaneous)
6. Impact to existing water, sewer, storm, and road infrastructure

The City may require additional information as requested to support review, approval, and acceptance of a submitted project. The City's goal is to review and provide an approval or review comments within 30 days. If review comments require a re-submittal by the applicant the City will expedite the subsequent review, but may take an additional 30 days for approval or additional comments. Applications that do not provide the information requested will not be reviewed until a complete set of information is received by the City. The City will return applications with plans that are not clear and concise allowing for an accurate review.

In addition to submitting plans to the City, it is also the responsibility of the Engineer to obtain the approval for water and sewer system extensions from the Montana Department of Environmental Quality (DEQ). No authorization for the extension of any water and sewer system will be issued by the City until approval is obtained from DEQ.

GP-19 Construction Inspection

All development work designed by an Engineer shall be inspected and certified by the same Engineer to ensure conformance to plans and specifications. The City reserves the right to engage in spot inspections of both private and public work per City of Polson Resolution #942. It is the Contractor's responsibility to notify the City of the work requiring inspection at least two (2) business days in advance so the City may schedule and perform such inspections. Failure to notify in time may oblige the City to arrange appropriate sampling and testing after-the-fact, with certification by a qualified designate. Costs of such testing and certification shall be borne by the Contractor.

It is the responsibility of the Developer, Contractor or their agents to have an approved set of plans and any necessary permits on the job site whenever work is being performed.

Maintenance and repair work within public right-of-way or easement shall be inspected and approved by the City. It is the Contractor's responsibility to notify the City of the work requiring inspection at least two (2) business days in advance so the City may schedule and perform such inspections.

GP-20 Guarantee for Equipment, Materials, & Workmanship for Maintenance Repairs

The Contractor shall guarantee all materials and equipment furnished, and construction work performed for maintenance and repair work on existing public infrastructure for a period of one (1) year from the date of written acceptance of the work by the City. The guarantee for new City infrastructure will be in accordance with Section GP-12.

GP-21 Stop Work Order

A written Stop Work Order may be issued by the City if the work in progress does not meet the Standards Manual for the City of Polson, Montana, or for any other valid reason. Work may resume only after a written Resume Work Order has been issued by the City.

GP-22 Relocation of Utilities

Requests to relocate an existing public utility shall be submitted in writing to the Public Works Department. A sketch shall be included that illustrates the existing location of the utility and the preferred relocation site. The request shall describe in detail the circumstances for the request. The Public Works Department may require the utility relocation to be designed and approved by a licensed engineer. If the relocation is approved by the Public Works Department the utility shall be relocated by a bonded and insured utility contractor. Under no circumstances will the City of Polson pay for any costs associated with the relocation of the utility.

GP-23 Asbestos Control

Asbestos Containing Material (ACM) may be encountered during a construction project in the form of asbestos cement pipe, pipe insulation, or as insulation in a structure that is being demolished. It can be found in pipe for water and sewer mains, electrical conduits, drainage pipe, vent pipes, etc. Normal breakage and crushing of the material can cause an asbestos fiber release which presents a serious hazard. It is imperative that asbestos fiber release be controlled. Citations, by regulatory agencies, for an asbestos fiber release carry substantial fines.

Only respiratory employees certified by the State of Montana as a Certified Asbestos Workers may work on ACM during construction, demolition, repair, maintenance, renovation, salvage, or disposal of ACM.

The Contractor shall have all asbestos removed from the site and properly disposed of by a State licensed asbestos contractor in accordance with the practices specified by the State of Montana Department of Environmental Quality, Lake County Solid Waste Department and all other pertinent State and Federal Regulations. (see ARM 17.74).

GP-24 Landscaping

The development of landscaping is to conform to the concepts and principles set forth in the City of Polson Development Code. Landscaping shall be required on all projects to provide; visual orientation for traffic safety, to create physical delineation of parking areas, to furnish definition and scale of the entire complex by interval plantings, and to ensure the preservation of land values by creating an environmental quality which complements the objectives of the respective land uses in any zone. A copy of the Development Code is available for review or purchase at the City of Polson offices at:

106 First Street East
Polson, MT 59860.

GP-25 Utility Easements

Public utilities shall be located within the public right-of-way unless field conditions make this impractical. In the event that a public utility must be placed on private property, a utility easement, twenty (20)-feet wide and centered over the utility shall be granted to the City. Where more than one public utility is to be placed in the easement, the utilities must be separated by ten (10) feet with a ten (10) foot buffer to the outside of the easement. In other words, two utilities would require a thirty (30) foot easement width; three utilities would require forty (40) feet, etc. Per the PDC, fences with a gate or separable section may be constructed across utility easements if approved by the Public Works Department.

SECTION II

DESIGN STANDARDS

DS-01 Design & Development Requirements

Design Requirements: All water, sanitary sewer, storm drainage and roadway systems necessary to provide service to and within a development shall be constructed at the Developers expense and shall be designed by a Professional Engineer licensed in the State of Montana. Plans, specifications and design reports shall bear the seal of the Engineer in responsible charge of the design.

Water and sanitary sewer system designs shall be reviewed concurrently by the City and the Montana Department of Environmental Quality, with approval of both required. Storm drainage and roadway designs shall be submitted to and approved by the City. All required approvals shall be obtained prior to beginning construction. Design calculations and testing results shall be submitted to the City as required or requested.

Professional Qualifications: Professional in the technical fields of Civil Engineering, Electrical Engineering, Geotechnical Engineering, Landscape Architecture, Soils Engineering, and Surveying who prepare or are responsible for the preparation of drawings, plans, specifications, or technical reports for obtaining permits and approvals shall be currently licensed or registered in the State of Montana and qualified by both experience and educational background in the technical areas as warranted by the specifics of the proposed development project.

Development Requirements: All subdivisions and developments shall be in compliance with the Subdivision Regulations of the City of Polson and these Standards for Design and Construction. It shall be the responsibility of the Developer to construct all roadways and utilities from the existing facilities to the far property line of the development or such other point within the development that may be specified by the City. All utilities shall be within a public right-of-way or easement to permit free and unobstructed access.

It is the Developers responsibility to obtain and provide the City with all easements and right-of-ways necessary to extend roadways and utilities to the far property line of the development. The Developer shall obtain written approval from the Polson Public Works Department stating they have reviewed and approved the location of easements for the future extension of roadways and utilities which shall be submitted with the final plat along with an 11” by 17” legible copy of the approved final plat showing the utility and/or easement locations.

All new utilities shall be placed underground. Except for sanitary sewer, water, and storm sewer underground utilities, if placed in the street right-of-way or easement, shall be located between the back of the sidewalk and the right-of-way. No underground utilities, except service sweeps from the utility trench to the street lights, utility boxes, pedestals, vaults, or transformers shall be placed in the boulevard between the back of curb and sidewalk or within a sidewalk itself No above ground utility boxes, pedestals, vaults, or transformers shall be placed within the radial extension of an easement, proposed roadway, or access way to any City facility.

Site plans, grading plans, and elevations used for infrastructure work shall be based on the North American Vertical Datum 1988. Site plans, projects, designs, and surveys conducted on City property or paid for with City funding shall be based on and utilize the local City horizontal coordinate system Assistance/coordinates can be obtained from the City.

DS-02 Water Systems

Water systems shall be designed, constructed, and tested in accordance with the current editions of circular Montana Department of Environmental Quality Circular #1 – Standards for Water Works, the Montana Public Works Standard Specifications and the City of Polson's Standards for Design and Construction.

In addition, the following shall apply to the design of all Water Mains:

All water main extensions will require a licensed Engineer to submit a written and stamped report to the City which addresses the fire and domestic flow requirements. The report shall include flow test results at the nearest hydrant to the development which shows the static pressure at zero flow from the hydrant and the residual pressure with available flow from the hydrant.

Minimum design water consumption demands shall reflect an average demand of one hundred fifty (150) gpcd (gallons per capita per day), a maximum daily demand of six hundred (600) gpcd, and a peak of twelve thousand (1,200) gpm. The submitting engineer is encouraged to provide a project specific analysis of water consumption. If a project specific analysis is provided and methodology approved by the City, different water demands may be utilized.

The City may not be able to perform the required hydrant flow testing required by DEQ. The submitting engineer should plan on providing this information for their design.

A. Isolation Valves: Isolation valves shall be installed at all intersections. Distance between isolation valves shall not exceed five (500) feet.

B. Fire Flow: Fire flow requirements shall be determined by the Polson Fire Department in coordination with the most recent adopted version of the Uniform Fire Code.

C. Minimum Pipe Sizes: The minimum diameter of all mains shall be eight (8) inches unless a smaller diameter is approved by the City. Fire hydrant runs less than fifty (50) feet in length and small looped systems that meet fire flow requirements may be permitted with six (6) inch mains.

D. Pipe Material: Water main piping from six (6) to twelve (12) inches in diameter shall be Class 150 PVC pipe conforming to AWWA C-900 Standards. All water main piping larger than twelve (12) inches in diameter shall conform to AWWA C-905 Standards.

E. Water Service Lines: Structures containing two or more residences under separate ownership, such as townhouses or condominiums, shall have separate service lines, service valves and meters for each residence. Structures containing two or more residences, offices or businesses that are rental units under

common ownership may have one service line, valve and meter for all occupants within a single structure.

F. Gate Valves: Gate valves shall be Mueller Resilient Wedge Gate Valves, or an approved equal, conforming to AWWA C-509 Standards.

G. Butterfly Valves: Butterfly valves shall be Mueller Lineseal Butterfly Valves, or an approved equal, conforming to AWWA C-504 Standards. All valves over twelve (12) inches in diameter shall be butterfly.

H. Fire Hydrants: Fire hydrants shall be Red Mueller Super Centurion Fire Hydrants with 5" Storz adapter with cap conforming to AWWA C-502 Standards. The placement of all fire hydrants shall be subject to the approval of the Fire Chief. Hydrant spacing shall not exceed; five hundred (500) feet along streets in residential areas, three hundred (300) feet in commercial areas and one hundred fifty (150) to two hundred (200) feet in industrial areas. Fire hydrants shall be covered until placed in service.

I. Service Clamps: Service clamps for PVC water mains shall be 11-13000 Series Mueller Brass, or an approved equal, designed for use with AWWA C-900 PVC pipe.

J. Corporation Valves and Service Valves: Corporation valves and service valves shall be Mueller 300 Series ball valves, or an approved equal.

K. Service Fittings: Service fittings shall be Mueller Insta-Tite or 110 Series compression fittings, or an approved equal.

L. Curb Boxes: Curb boxes shall be Mueller 1-1-10308 or an approved equal, cast iron extension type with arch pattern base, one and a half (1½) inch I.D. upper section, minimum length six and a half (6½) feet, equipped with a stationary rod and a pentagon brass plug.

M. Service Pipe: Service pipe up to three (3) inches in diameter shall be polyethylene pipe conforming to AWWA C-90 I Standards. Service pipe four (4) inches or larger in diameter shall be Class 1 50 PVC pipe, conforming to AWWA C-900 Standards.

N. Tapping Sleeves: Tapping sleeves shall be Romac SST Ill or an approved equal.

O. Ductile Iron Fittings: Ductile iron fittings shall be Class 350 5S13 fittings conforming to AWWA C-I 53 Standards.

P. Valve Boxes: Main line valve boxes shall be Tyler 6860 DD – screw type, #6 base to be marked water or approved equivalent.

Q. Mechanical Joint Restraints: Megalugs or similar mechanical joint restraining devices may be used. Thrust blocks shall be required at all megalugs and similar mechanical joint restraining devices.

R. Blow-offs: Valved blow-offs shall be installed at all main dead-ends that do not have a fire hydrant.

S. Warning Tape: Detectable warning tape shall be a minimum of five (5) mils thick, three inches wide and conform to APWA colors.

T. Toner Wire: All mains shall be laid with fourteen (14) gauge insulated solid core copper toner wire. Toner wire shall be insulated and taped to the top of the water main. Splices of toner wire shall be made with heat shrink tape.

DS-03 Sanitary Sewer Systems

Sanitary sewer systems shall be designed, constructed and tested in accordance with the current editions of Montana Department of Environmental Quality Circular #2 - Design Standards for Wastewater Facilities, Montana Public Works Standard Specifications and the Standards for Design & Construction, Polson, Montana.

The following shall apply to the design of all sanitary sewers:

Minimum design contributing wastewater flows for residential shall be 100 gpcd (gallons per capita per day). Commercial, industrial, and recreational shall have a design minimum as detailed in DEQ 4, Table 5-1 and 5-2. Peak hourly flow is to be determined from Figure 1 of DEQ 2. The submitting engineer is encouraged to provide a project specific analysis of wastewater generation. If a project specific analysis is provided and methodology is approved by the City, different wastewater flows may be utilized.

The City may require sulfide generation analysis. If dissolved sulfide is likely to exceed 0.2 mg/L, non-corrosive linings may be required in addition to special lift station design.

Watertight manhole covers shall be required in all locations.

Gravity Sewers: A licensed Engineer shall submit a written and stamped report to the City for all improvements or additions to the sanitary sewer system. The report shall assess the ability of the existing collection system to handle the peak design flow from the project and the impact on the Wastewater Treatment Plant.

Sewage Lift Station: A licensed Engineer shall submit a written and stamped report to the City for any project that requires a new sewage lift station or will contribute inflow to an existing sewage lift station. The report for the new sewage lift station shall contain, but not be limited to, the following:

- A description of the proposed wet well, pumping system and force main.
- The capacity of the recommended pumps and potential for upgrading.
- A map showing the potential lift station service area.
- The average and peak design flows for the proposed project and for the potential service area.
- The hydraulic capacity of the force main.
- The reserve capacity of the lift station when the proposed project is on line at full capacity.
- The pump run and cycle times for the average and peak design flows.
- Strategies for improvements which may be necessary to accommodate future sewer extensions (i.e. increased storage, pumping or auxiliary power capacity).

- A statement of the pump selection process, including the Engineer's calculations for the total dynamic head, total discharge head, net positive suction head and other pertinent pump selection criteria.
- The designed pump operating curve plotted on a manufacturer's pump performance chart with the designed operating point clearly indentified.

The report for a project that will contribute inflow to an existing sewage lift station shall contain, but not be limited to, the following:

- A description of the existing wet well, pumping system and force main.
- The capacity of the existing pumps and potential for upgrading.
- A map showing the potential lift station service area.
- A list of the existing users and their average design flows.
- The existing peak design flow and reserve capacity.
- The pump run and cycle times for the existing average and peak design flows.
- The hydraulic capacity of the force main.
- A list of the proposed users and their average design flows.
- The proposed average and peak design flows to the lift station.
- The reserve capacity of the lift station with the proposed project on line at full capacity.
- The pump run and cycle times for the proposed average and peak design flows.
- Recommendations for improvements, if necessary to enable the lift station to serve the proposed project.

Unless otherwise approved by the City, new pumping systems shall be duplex, above ground, self-priming, suction lift type and the pumps shall be equal to that manufactured by the Gorman Rupp Company. The use of a proprietary name of a particular Supplier or Manufacturer is intended to establish the type, function, and quality expected. Submersible three (3) inch pumps or submersible grinder pumps will be considered based on the required operating volumes and heads of the proposed lift station. An emergency power supply will be required for all lift stations. If approved by the city, a quick connect for an emergency portable generator can be provided in lieu of a fixed generator . Upon request from the City, the Engineer shall submit a list of three lift stations of the type proposed which have been in operation at least five (5) years. The City reserves the right to accept or reject the proposed lift station.

The lift station must provide emergency storage to accommodate a two (2) hour peak flow and/or the eight (8) hour average flow. Automated auxiliary power may be provided instead of emergency storage if approved by the City.

An alarm system shall be provided that is capable of detecting power interruption, high water and high motor temperature conditions. The alarm signals shall be directed to an onsite alarm monitoring and telephone dialer system. The dialer system must be coordinated with the City and compatible to existing equipment. An hour meter, suction pressure gauge tap and valve, and discharge pressure gauge tap and valve, are required on each pump. Amperage meters are required on each leg of the electrical wiring. Controls shall include a pump run alternator. The electrical power supply shall contain lightning protection. The primary level control system shall be a transducer or all bubbler system.

Minimum Pipe Size: The minimum diameter of any gravity sanitary sewer main shall be eight (8) inches.

Minimum Depth: The depths of sewers shall be in accordance with MDEQ Circular 2. (MDEQ Circular 2, Paragraph 33.2 states, "In general, sewers should be sufficiently deep to receive wastewater from basements and to prevent freezing. Insulation shall be provided for sewers that cannot be placed at a depth sufficient to prevent freezing.").

Sanitary Sewer Service Lines: Structures containing two or more residences under separate ownership, such as townhouses or condominiums, shall have separate sewer service lines for each residence. Structures containing two or more residences, offices or business that are rental units under common ownership may have one service line for all occupants within a single structure.

The terminal end of sanitary sewer services at undeveloped lots shall be marked in accordance with MPWSS Standard Drawing No. 02730-2.

Quality of Sewage: No development shall introduce any sewage into the City of Polson Sanitary Sewer System that is not consistent with the requirements City ordinances or resolutions. No storm water shall discharge to any sanitary sewer.

Gravity Main Cleanouts: Gravity main cleanouts shall not be allowed unless otherwise approved by the City.

Sanitary Sewer Manhole Ring and Cover: The sanitary sewer manhole ring and cover shall be Inland Foundry 772A, Olympic Foundry MH37A or approved equal. The cover shall be marked Sewer.

Warning Tape for Force Mains. Detectable warning tape shall be a minimum of five (5) mils thick, three (3) inches wide and conform to APWA colors.

Toner Wire for Force Mains: All force mains shall be laid with fourteen (14) gauge insulated solid core copper toner wire. Toner wire shall be insulated and taped to the top of the force main. Splices of toner wire shall be made with heat shrink tape.

Oil/Water Separators: Automotive repair facilities and paint shops, dealerships, gas stations, equipment degreasing areas, and other facilities generating wastewater with oil and grease content are required to pre-treat these wastes before discharging to the City sanitary sewer system. Pre-treatment requires that an oil/water separator be installed and maintained on site.

Oil/water separators for commercial/industrial processes must be sized on a case-by-case analysis of wastewater characteristics. Typically a minimum capacity of seven hundred fifty (750) gallons is required for small gas stations, auto repairs, and light commercial sites; fifteen hundred (1,500) gallon capacity for large-scale truck washing and steam cleaning facilities. The ultimate discharge must be directed to the sanitary sewer system. All units regardless of size shall be fitted with a standard final-stage sample box and spill-absorbent pillows. Oil/water separators shall be commercially manufactured and sized for the intended discharge rates for the facility where it is to be installed.

DS-04 Storm Drainage Systems

Storm Water Design Report: For all developments containing more than five thousand (5,000) square feet of added or replaced impervious surface, a storm water report shall be submitted to the City for approval. The storm water report shall be prepared and stamped by a licensed professional engineer. The storm water report shall contain the storm water calculations and a discussion of the design rationale used for the development site.

Storm Water Collection & Conveyance: Storm water within public street rights-of-way shall be carried within the curb and gutter, grassed roadside swales, or within underground piping and appurtenances to the detention/retention facility. No storm water shall traverse the paved area of any through street. Developments upstream and adjacent to existing storm water piping shall be designed to discharge the storm water runoff directly into the existing piping.

Curbs and Gutters: Streets and roads shall be designed to ensure proper drainage. Curbs and gutters may be required for any street at the discretion of the City Council. Curbs and gutters of adjoining properties shall be extended to match the new curb and gutter.

Culverts, Bridges and Drainage Facilities: Culverts or bridges of adequate size shall be provided and installed by the developer where drainage channels intersect any street right-of-way or easement. All culverts shall extend at least across the entire width of the base of the fill; the amount of backfill to be placed over the culvert and a culvert's capacity shall be determined by a professional engineer. Culverts larger than eighteen (18) inches shall have flared ends. The minimum pipe size shall be twelve (12) inches.

The developer shall provide suitable drainage facilities for any surface runoff affecting the subdivision. These facilities shall be located in street rights-of-way or in perpetual easements of appropriate width and are subject to approval by the City Engineer. Each culvert or drainage facility shall be designed to accommodate existing runoff from upstream drainage areas.

Storm Water Discharge: Drainage systems shall not discharge into any sanitary sewer facility. Runoff that is discharged directly into a stream shall meet all applicable standards. All discharge permits shall be obtained by the developer and a copy provided to the Public Works Department prior to the start of any construction.

Re-vegetation: All areas disturbed during development of the subdivision shall be immediately re-vegetated in accordance with plans approved by the Public Works Department, or the appropriate public agency.

Manhole Spacing: The maximum spacing between storm manholes shall be four hundred (400) feet.

Minimum Pipe Size: The minimum diameter of any gravity storm drainage main shall be twelve (12) inches. Laterals may be eight (8) inches up to a maximum length of sixty (60)-feet.

Minimum Pipe Slope: The pipe slope shall be designed to provide minimum cleaning velocity of 2.5 fps.

Storm Drain Manhole Ring and Cover: The storm drain manhole ring and cover shall be Inland Foundry 772A, Olympic Foundry 37A, or approved equal. The cover shall be marked Storm.

Storm Drain Inlets: Storm drain inlets shall be as follows:

Straight (SD-6) and Curb & Gutter (SD-4) Applications……. East Jordon Iron Works 7222, or approved equal

Drive Over Curb & Gutter (SD-5) Applications……..…. Inland Foundry 501, Olympic Foundry SM44, or approved equal

DS-05 Roadways and Walkways

Roadway systems including private roadways shall be designed, signed and constructed in accordance with the current edition of the Standards for Design and Construction for the City of Polson, Montana, the Montana Public Works Standard Specifications, the current Manual on Uniform Traffic Control Devices, and the Development Code of the City of Polson. All roads within a proposed subdivision shall be designed by a professional engineer and approved by the City. Upon completion of roadway construction, a professional engineer shall certify that the construction meets the requirements of the City's Standards for Design and Construction.

Traffic Analysis: Developments contributing three hundred (300) or more vehicle trips per day to the City street system shall require a traffic impact analysis. A licensed engineer shall submit to the City a traffic impact analysis report. This report shall state the existing traffic conditions for all impacted roadways, including the existing levels of service for each road. The report shall identify all negative impacts associated with the proposed development and shall thoroughly detail a mitigation plan for the negative impacts of the proposed development. The developer shall be responsible to maintain the level of service of the affected existing roadway system. The report shall also take into consideration other forms of transportation including bicycle and pedestrian.

The Traffic Impact Study shall be completed in accordance with Montana Department of Transportation requirements and nationally accepted standards, The Traffic Impact Study will assess anticipated traffic impacts associated with the proposed development and recommend appropriate mitigation measures for the adjacent transportation network.

Recommendations developed will be based upon nationally accepted traffic engineering principles, related resources, and professional engineering judgment.

Cul-De-Sacs: All dead-end streets shall terminate in an approved cul-de-sac. Where future street extension is proposed, a temporary cul-de-sac of adequate size as approved by the Fire Chief, Road Superintendant, and City Engineer shall be provided. Unless otherwise approved by the City Engineer, roadways that terminate at a cul-de-sac shall have a maximum length of fifteen hundred (1,500) feet. The cul-de-sac radius shall be fifty (50') feet to the back of the curb and sixty (60') feet to the right-of-way.

Horizontal Alignment: Horizontal alignment of streets must ensure adequate sight distances. Street alignment shall be designed for a design speed of thirty (30) miles per hour in accordance with the latest edition of AASHTO A POLICY ON GEOMETRIC DESIGN OF HIGHWAYS AND STREETS.

Collector and Arterial Streets: Location of collector and arterial streets shall comply with the Polson Development Code or any other major street and highway plan adopted by the Lake County Board of County Commissioners and/or the City of Polson, The development of frontage roads or shared accesses serving new developments shall be used along collectors and arterials rather than the use of individual driveways or approaches.

Arterial Street Sub base: The sub base for arterial streets shall be crushed stone in accordance with Montana Public Works Standard Specifications Section 02234.

Traffic Control Signs, Street Name Signs and Street Names: The Developer shall provide and install the necessary Traffic Control Signs in accordance with the Manual on Uniform Traffic Control Devices. Street name signs shall be installed at each intersection. All proposed street names shall be submitted to the Road Department for approval prior to the preliminary plat submittal.

Sidewalks: All developments shall have sidewalks which will allow pedestrians to safely travel from any part of the development to the boundaries of the development. Developments abutting existing or proposed roadways will be required to have sidewalks within the public right-of-way and parallel to the roadways. The minimum width of a sidewalk shall be five (5) feet in residential areas and ten (10) feet wide in commercial/industrial areas. Sidewalks are required on both sides of the street in all commercial subdivisions. The City Council may waive the requirements for sidewalks on one or both sides of and cul-de-sac or other street segment serving fewer than fifteen (15) dwelling units. Residential sidewalks shall be separated from the street by a boulevard or open space that has been landscaped within accordance with the Polson Street Tree Ordinance and a plan approved by the City of Polson Tree committee. The width of this buffer shall be in accordance with the PDC Appendix G. A soil sterilant shall, except where inconsistent with shoreline or wellhead protection regulations, be applies before sidewalk or trail surfaces are laid.

TABLE 1
Road Design Standards for Local Subdivision Streets

DESIGN STANDARDS	ARTERIAL	COLLECTOR	LOCAL	RURAL
Right-of-Way	60 ft.	55 ft.	55 ft.	55 ft.
Pavement Width (mot including curb)[1]	33 ft.	26 ft.	24 ft.	24 ft.
Maximum Grade	8%	8%	8%	8%
Cul-de-sac Back of curb radius[2]	N/A	N/A	50 ft.	50 ft.
Cul-de-sac Minimum right-of-way radius[2]	N/A	N/A	60 ft.	60 ft.
Cul-de-sac Maximum length[2]	N/A	N/A	1,500 ft.	1,500 ft
Cul-de-sac Maximum Cross-Slope	N/A	N/A	5%	5%

1 On street parking governed by City of Polson Subdivision Regulations.
2 Distance to be measured from the centerline of the intersection to the center point of the cul-de-sac.

Street Intersections: Street intersections shall meet the following requirements:

1. Streets shall intersect at 90° angles, if topography permits but in no case shall the angle of intersection be less than 5° from perpendicular for a minimum distance of fifty (50) feet as measured along the centerline from the edge of traveled way.
2. No more than two (2) streets may intersect at one point.
3. Two streets meeting a third street from opposite sides shall meet the same point, or their centerlines shall be offset at least one hundred twenty-five (125)-feet for rural, local, and collectors and two hundred (200)-feet for arterials.
4. Intersections of local streets with major arterials shall be kept to a minimum.
5. Maximum straight tangent grade of approach to any intersection shall not exceed 3% for a distance of sixty (60) feet as measured from edge of transverse pavement to provide for adequate starting, stopping and stacking distances.
6. The minimum back of the curb radii at street intersection shall be twenty (20) feet.
7. Intersections shall be designed for a minimum sight distance of one hundred fifty (150) feet. A minimum sight distance of two hundred (200) feet shall be required in all vertical and horizontal curves.

DS-06 Driveways

The nearest edge of any residential driveway shall be not less than thirty five (35) feet from the edge of the pavement to the nearest intersecting street. All new driveway locations shall be reviewed and approved by the Road Department prior to beginning construction.

DS-07 Placement of Utilities

Only water, sewer, and storm sewers may be placed within the street right-of-way. No underground utilities, except service sweeps from the utility trench to the street lights, utility boxes, pedestals, vaults, or transformers shall be placed in the boulevard between the back of curb and sidewalk or within a sidewalk itself. No utility boxes, pedestals, vaults or transformers shall be placed within the boulevard, the radial extension of an easement, proposed roadway, or access way to any City facility. All applicable laws, rules and regulations of appropriate regulatory authority having jurisdiction over utilities shall be observed.

Street Lighting: Street lights shall be required on all streets within the subdivision.

Proposed street lighting construction shall in all respects conform to the technical criteria for analysis and design of street lighting as set forth in this section. Plans shall be submitted to the Public Works Department for approval and shall include all information as may be required or described hereinafter. Plans shall be submitted concurrently with the street plans.

Determination of light source size, type, mounting height and spacing shall at least conform to the requirements outlined below based upon the required illuminance levels when the luminaries are at their lowest output. This condition occurs just prior to lamp replacement and luminaire washing.

Formulas calculating average illumination levels shall include light loss factors relating to lamp lumen depreciation.

The minimum maintained illumination shall be 0.3 foot-candles at the outer edges of the sidewalks. The uniformity ratio shall not exceed 6.1. The control of candlepower distribution shall be a true ninety (90) degree cutoff. All calculations shall conform to the standard of practice of the Illuminating Society of North America and can be done manually, electronically, or derived from tables and data provided by the manufacturer. In order to achieve this illumination level, for example, a thirty (30) foot light pole using a one hundred (100) watt high pressure sodium light (100 W 1-IPS) and a Type III lens, at approximately three hundred (300) foot intervals will achieve the required level of illumination. If an alternate light type, pole height or fixture is proposed a photometric plan shall be submitted to the Polson Public Works Department demonstrating that the proposed plan achieves the illumination levels stated above.

The electrical system shall conform to the standards as listed in the American National Standard Practice for Roadway Lighting, the National Electrical Code (NEC), the National Electrical Safety Code (NESC), the IES Lighting Handbook, Illuminating Engineering Society of North America, and the requirements of the Mission Valley Power.

SECTION III

STORMWATER MANAGEMENT

SM-01 Objective and Purpose

Development projects in and around the City of Polson have resulted in the replacement of open land with impervious surfaces that prevent infiltration and increase stormwater runoff rates and volumes.

These changes in stormwater runoff patterns can lead to flooding problems, both at the project site and downstream, affecting water quality as sediment and pollutants are transported into streams, wetlands, lakes, and groundwater.

The purpose of this section is to control stormwater runoff to meet pre-development conditions.

SM-02 General Requirements

The owner or owner's agent is required to submit a stormwater management report to the Public Works Department in conjunction with the following:

- Major and minor subdivision final plat approval
- Site plan approval;
- Issuance of a Building Permit; and,
- Issuance of a City Excavation Permit (for work in City Right-of-Way).

The storm drainage submittal shall be prepared in accordance with this section. The submittal shall be prepared by a professional engineer currently licensed in the State of Montana and shall be submitted to the Public Works Department for review and acceptance.

The rate and volume of stormwater runoff originating on any proposed land development, road or area draining to, across or through the project site shall be estimated in accordance with the criteria presented in this Manual. These estimates shall be the basis of the drainage submitted. The peak rate of stormwater runoff from ant proposed land development to any natural of constructed point of discharge downstream shall not exceed the pre-development peak rate of runoff. The post-development volume of runoff can exceed the pre-development volume of runoff when the required down-gradient analysis demonstrates that there will be no adverse impacts (i.e. erosion, capacity, etc.) on down gradient properties or existing natural and constructed conveyance systems.

Stormwater runoff from a developed site shall leave the site in the same manner and location as it did in the pre-developed condition. Flow may not be concentrated onto down-gradient properties where sheet flow previously existed. Drainage shall not be diverted and released downstream at points not receiving drainage prior to the proposed development. Drainage shall not be diverted from one drainage basin to another. A sown-gradient analysis demonstrating that there will be no expected adverse impacts on down gradient properties will be required.

SM-03 Core Requirements

This section introduces the four Design Requirements for new development and redevelopment projects in the City of Polson:

- Core Requirement No. 1 – Drainage Submittal
- Core Requirement No. 2 – Geotechnical Site Investigation
- Core Requirement No. 3 – Stormwater Control Facilities
- Core Requirement No. 4 – Natural and Constructed Conveyance Systems
- Core Requirement No. 5 – Operation and Maintenance

SM-04 Regulatory Threshold

The regulatory threshold is the "trigger" for requiring compliance with the Core Requirements of this section. In the City of Polson, it is defined as "the addition or replacement of five thousand (5,000) square feet or more of impervious surfaces at full development".

SM-05 New Development

New development is the conversion of previously undeveloped or permeable surfaces to impervious surfaces and managed landscape areas. New development occurs on vacant land or through expansion of partially developed sites.

SM-06 Redevelopment

Redevelopment is the replacement of impervious surfaces on a developed site. Redevelopment occurs when existing facilities are demolished and rebuilt or substantially improved through reconstruction. Rebuilt or reconstructed facilities are regarded in the same manner as new development and shall comply with the Core Requirements of this section.

On redeveloped sites where pre-existing facilities remain, the old facilities are not subject to the requirements of this section if they remain hydraulically isolated from the new facilities. For projects that are implemented in incremental stages, the redevelopment threshold applies to the total amount of impervious surface replaced at full build-out; the new development thresholds apply to the total amount of new impervious surfaces added at full build-out.

The long-term goal of the redevelopment standard is to reduce the peak volume; of stormwater runoff entering the City's existing conveyance. System to, extend, to the greatest extent possible, its overall service life. A project may be granted a design deviation when site conditions prevent full compliance with the core Requirements; however, every effort shall be made to find creative ways to meet the intent of the Core Requirements. Design deviations will not be granted waiving stromwater requirements for new impervious surfaces.

Sites with 100% existing building coverage that are currently connected to a municipally owned storm sewer or combined sewer must be evaluated on a case-by case basis to continue to be connected without treatment; additional requirements such as flow restrictors may also be required.

SM-07 Design Deviation

A design deviation is an administrative approval of design elements that do not conform to, or are not explicitly addressed, by this section.

The requirements of this section represent the minimum criteria for the design of stormwater management systems. Designs that offer a superior alternative to standard measures, or creative means not yet specified in the standards, are encouraged.

Applicability:
The project Owner or Owner's agent shall request a design deviation when proposing non-standard methods, analysis, design elements, or materials. A design deviation will only be considered for review if:

- The design elements proposed do not conflict with or modify a condition of approval; and,
- The design elements proposed are based on sound engineering principles and best management practices, and are consistent with the public interest in stormwater control and environmental protection.

Submittal:
For consideration of a design deviation, the project Owner or Owner's agent shall submit a design deviation request and supporting documentation. The supporting documentation shall include sufficient information to make a decision as to the adequacy of the proposed facility or design. When infiltration is proposed, if negative impacts on down-gradient properties are of concern or seasonal high groundwater is suspected, then a geotechnical site investigation shall be submitted as part of the design deviation package. The design deviation package shall demonstrate that:

- There are special physical circumstances or conditions affecting the property that may prohibit the application of some of the Core Requirements in this section.
- Every effort has been made to find alternative ways to meet the objectives of the Core Requirements.
- Approving the design deviation will not cause adverse impact on down-gradient properties, public health or welfare; and,
- Approving the design deviation will not adversely affect the recommendations of any applicable comprehensive drainage plan.

SM-08 Core Requirement #1 – Drainage Submittal

Projects are expected to demonstrate compliance with all applicable Core Requirements through the preparation of a Drainage Submittal. The Drainage Submittal shall include; road and drainage construction plans, describe the proposed measures to dispose of stormwater, and all other supporting documentation as needed. The contents of the Drainage Submittal will vary with the type, size, location of the project, and individual site characteristics.

The Public Works Department reviews the Drainage Submittal for compliance with this section and other applicable standards. Specific requirements for the Drainage Submittal are discussed later in this section.

Applicability:
A Drainage Submittal is generally required for any land-disturbing activity. Land-disturbing activities are those that result in a change in the existing soil cover (both vegetative and non-vegetative) or site topography. The sections below summarize the types of activities that require a Drainage Submittal, as well as those that are exempt.

A Drainage Submittal is <u>required</u> for the following types of activities:

- Commercial and industrial buildings including institutional and multi-family residential projects;
- Minor or major subdivisions;
- Change of use;
- Conditional use permits;
- Plan Unit Developments (PUD)
- Public or private parking lots; and,
- Public or private road projects.

The following types of activities are generally exempt from the requirement to prepare a drainage submittal:

- Single-family residential/duplex building permits;
- Temporary use permits, unless the use could cause adverse water quality impacts or other drainage-related impacts;
- Maintenance projects that do not increase the traffic-carrying capacity of a roadway or parking area, such as:
    - Removing and replacing a concrete or asphalt roadway to base course of subgrade or lower without expanding or improving the impervious surfaces;
    - Repairing a roadway base or subgrade;
    - Resurfacing with in-kind material without expanding the area of coverage;
    - Overlaying existing asphalt or concrete pavement with asphalt or concrete without expanding the area of coverage; and,
    - Chip seal projects.

The following types of activities are exempt from the requirement to prepare a drainage submittal:

- Actions by a public utility or any other governmental agency to remove or alleviate an emergency condition, restore utility service, or reopen a public thoroughfare to traffic;
- Records of survey, boundary line adjustments, and property aggregations, unless the action affects drainage tracts and easements;
- Operation and maintenance or repair of existing facilities; and,
- Road and parking area preservation/maintenance projects, such as:
    - Pothole and square-cut patching
    - Crack sealing

- Shoulder grading
- Reshaping or regarding drainage system
- Vegetation maintenance

SM-09 <u>Core Requirement #2 – Geotechnical Site Investigation</u>

A Geotechnical Site investigation (GSI) is required to demonstrate suitability for stormwater disposal and to determine sub-level structure construction feasibility. A qualified geotechnical engineer (a professional engineer currently licensed in the State of Montana with geotechnical engineering as a specialty) is required to perform the GSI. Hydrogeologists and engineering geologists may prepare geotechnical site characterization studies, excluding structural, foundation and pavement design.

Applicability:
A GSI will be required for most projects. The scope and geographic extent of the investigation may vary depending on the general location and setting of the site, the characteristic of the target soil deposits, and whether there are known or anticipated drainage problems in the vicinity of the sire.

A GSI is required for:

- Projects proposing infiltration (infiltration facilities, detention facilities receiving credit for pond bottom infiltration, etc.);
- Projects located within or draining to a problem drainage area or study area as recognized by the City Engineer; or,
- Projects with proposed sub-level structures (building foundations, building basements, City utilities, etc. or as required by the City Engineer).

SM-10 <u>Core Requirement #3 – Stormwater Control Facilities</u>

Stormwater Control Facilities (SCF's) are necessary to protect stream morphology and habitat and to mitigate potential adverse impacts on down-gradient properties and floodplains due to the potential increase in stormwater runoff caused by land development.

The peak rate of stormwater runoff from any proposed land development to any natural or constructed point of discharge downstream shall not exceed the pre-development peak rate of runoff. The post-development volume of runoff can exceed to pre-development volume of runoff when the required down-gradient analysis demonstrates that there will be no adverse impacts on down gradient properties or existing natural and constructed conveyance systems. The City Engineer reserves the right to deny a request for increased stromwater volumes or to condition any approval at their sole discretion.

When site conditions allow, infiltration is the preferred method of flow control for stormwater runoff. All projects are encouraged to infiltrate stormwater runoff on site to the greatest extent possible so long as such infiltration will not have adverse impacts on down-gradient properties or improvements.

Applicability:
All projects that meet the regulatory threshold shall comply with this Core Requirement.

Design Criteria:
The NRCS Type I 24-hour storm event is the design storm for all flow control facilities that use a surface discharge or a combined surface and subsurface system.

Infiltration Facilities: Infiltration facilities shall be sized to fully infiltrate the post-development NRCS Type 1 10-year, 24-hour design storm and the design water surface for all facilities shall be the 100-year post developed water surface elevation. All overflows (structure or spillway) shall pass the 100-year, 24-hour developed peak flow rate. The overflow path shall drain toward the natural discharge point of the contributing basin, such that the overflow route or termination of stormwater does not adversely impact down-gradient properties or structures.

Retention Facilities: For projects proposing Retention, the facilities shall be designed to store the 100-year, 24-hour post development storm events and shall provide an overflow path, with the capacity to convey the one hundred (100)-year storm event.

Detention Facilities: For projects proposing to detain and release stormwater runoff, the facilities shall be designed such that the release rate does not exceed the pre-developed conditions for a range of storm events. The analysis of multiple design storms is needed to control and attenuate both low and high flow events.

The NRCS Type 1 24-hour storm events is the design storm to be used for all flow control facilities that use a surface discharge. The design water surface for all facilities shall be the 100-year post developed water surface elevation. All overflows (spillway structures) shall be located above the design water surface elevation and pass the 100-year, 24-hour developed peak flow rate.

The total post-developed discharge rate leaving the site (including bypass flow) shall be limited to the pre-development rates listed in Table II-A. Bypass flow is the runoff that leaves the site without being conveyed, retained/detained by the new development or redevelopment drainage system. These flows are generated off site and simply considered pass-through flows.

Table II-A
Allowable Post-Developed Discharged Flow Rates

Design Event (24-hour storm)	Discharge Rate [1]
2-year	$\leq$ 2-year 24 hr pre-developed peak hour rate
10-year	$\leq$ 10-year 24-hr pre-developed peak hour rate
100-year [2] (Emergency Overflow)	Overflow route only [2]

1 Post-developed flow is equal to the release from detention facility plus the bypass flow
2 the emergency overflow shall direct the 100-year post-developed flow safely toward the downstream conveyance system

SM-11 <u>Core Requirement #4 – Natural & Constructed Conveyance Systems</u>

The conveyance system includes all natural or constructed components that collect stormwater runoff and convey it away from structures in a manner that adequately drains sites and roadways, minimizing the potential for flooding and erosion.

Engineered conveyance elements for proposed projects shall be analyzed, designed, and constructed to provide protection against damage to property and improvements from uncontrolled or diverted flows, flooding, and erosion.

Projects shall be designed to protect certain natural drainage features including floodplains, natural drainage ways, and natural depressions that store water or allow it to infiltrate into the ground. These features are collectively referred to as the "Natural Drainage Ways" (NDW). Preserving the NDW will help ensure that stormwater runoff can continue to be conveyed and disposed of at its natural location. Preservation also increases the opportunity to use the predominant systems as regional stormwater facilities.

Stormwater runoff shall be discharged in the same manner and at the same location as in the pre-developed condition. Stormwater runoff shall not be concentrated onto down-gradient properties where sheet flow previously existed and shall not be diverted to points not receiving stormwater runoff prior to development. Stormwater runoff shall not be conveyed from one drainage basin to another.

Applicability:
All projects shall comply with this Design Requirement.

Design Criteria:
<u>Natural & Constructed Channels</u>: Constructed and natural channels shall be designed with sufficient capacity to convey, at a minimum, the depth associated with the 10-year design storm event peak flow rate, assuming developed conditions for on-site tributary areas and existing conditions for any off-site tributary areas.

<u>Culverts under roadways or embankments</u>: A culvert is a short pipe used to convey flow under a roadway or embankment. Culverts are used to pass peak flow from defined drainage ways identified on contour maps. New culverts shall be designed with sufficient capacity to convey the 10-year design storm event assuming developed conditions for the on-site basin and existing conditions for the off-site basin.

<u>Gutters</u>: Gutter flows in roadways shall allow for the passing of vehicular traffic during the 10-year design storm event by providing non-flooded zones. For paved roadways, the non-flooded width requirement varies with the road classification.

<u>Storm Drain Systems & Inlets</u>: The 10-year design storm event shall be used to size the conveyance system regardless of the method used to size the disposal facility.

Enclosed systems may surcharge or overtop drainage structures for storm events that exceed the drainage facility design storm, as long as a path shall be capable of conveying the 100-year storm event

and should either drain toward the natural discharge point of the contributing basin (preferred) or away from adjacent buildings, residences, etc. so as to avoid adverse impacts due to flooding.

SM-12 <u>Core Requirement #5 – Operation & Maintenance</u>

To ensure that SCF's are adequately maintained and properly operated, documentation describing the applicable preventive maintenance and recommended maintenance schedule shall be prepared and provided to the entity responsible for maintaining the stormwater system.

For SCF's outside of the public road right-of-way, the project Owner shall provide the financial means and arrangements for the perpetual maintenance of the drainage facilities. Owners shall operated and maintain the facilities in accordance with an operation and maintenance plan that meets the criteria specified in Section IV.

Applicability:
All projects that meet the regulatory threshold and that propose drainage facilities or structures shall comply with this Core Requirement.

SECTION IV

STORMWATER FACILITIES MAINTENANCE, PARCELS, & EASEMENTS

MA-01 Maintenance

Introduction: Proper maintenance of stormwater facilities leads to better performance and increases the life of the facility. Insufficient maintenance of stormwater facilities can lead to poor performance, shortened life, increased maintenance and replacement costs, and property damage.

The City of Polson maintains the stormwater system structures located within the public road right-of-way. Drainage parcels created by public projects will be maintained by the City of Polson. The project Owner shall provide for the perpetual maintenance of all elements of the stormwater system located outside the public right-of-way.

The high frequency maintenance of vegetated cover, turf grass, and other landscaping within the public right of way and within easements that accommodate public road runoff is the responsibility of the adjacent property owner. When applicable, the following maintenance-related items shall be submitted with the Drainage Submittal (refer to Section III) for all projects:

- A copy of the conditions, covenants and restrictions (CC&Rs) for the homeowner's association (HOA) in charge of operating and maintaining all elements of the stormwater system
- A Financial Plan outlining the funding mechanism for the operation, maintenance, and repair of the private stormwater system, including contingencies
- An Operations and Maintenance (O&M) Manual

Applicability: All projects that meet the regulatory threshold and that propose drainage facilities or structures shall comply with the Core Requirement for operation and maintenance. See Section III for regulatory threshold descriptions.

Homeowner's & Property Owner's Associations: For privately maintained stormwater systems in residential neighborhoods, an HOA shall be formed to maintain the facilities located outside of the public right-of-way.

A draft copy of the CC&Rs for the HOA in charge of operating and maintaining the facilities associated with the stormwater system shall be submitted as part of the Drainage Submittal review package. The CC&Rs shall summarize the maintenance and fiscal responsibilities of the HOA and reference the O&M Manual. HOA dues shall provide funding for the annual operation and maintenance and replacement costs of all facilities associated with the stormwater system. For commercial, industrial, and multi-family residential developments with joint stormwater systems and multiple owners, a property owners' association (POA) of similar entity such as a business shall be formed, or a reciprocal-use agreement executed.

HOA's and POA's are to be non-profit organizations. A standard business license is not acceptable for this purpose.

Operation & Maintenance Manual: For stormwater systems operated and maintained by a HOA or POA, an O&M Manual is required. The O&M Manual summarizes the tasks required to ensure the proper operation of all facilities associated with the stormwater system and must include, as a minimum:

- Description of the entity responsible for the perpetual maintenance of all facilities associated with the stormwater system, including legal means of successorship
- Description of maintenance tasks to be performed and their frequency
- An inspection check list to be used for the annual maintenance inspections
- A list of the expected design life and replacement schedule of each component of the stormwater system
- A general site plan (drawn to scale) showing the overall layout of the site, all the facilities associated with the stormwater system, and their elevations

Financial Plan: A Financial Plan is required in order to provide the entity responsible for maintenance with guidance in regard to financial planning for maintenance and replacement costs. The Financial Plan shall include the following items:

- A list of all stormwater-related facilities and their expected date of replacement and associated costs
- Sinking fund calculations that take into consideration probable inflation over the life of the infrastructure and estimated the funds that need to be set aside annually
- A mechanism for initiating and sustaining the sinking fund account demonstrating that perpetual maintenance of all facilities associated with the stormwater system will be sustained

Maintenance Access Requirements: An access road is required when the stormwater system facilities/structures are located 8 feet or more from an all weather drivable surface. When required, maintenance access roads shall meet the following minimum requirements:

- The horizontal alignment of all access roads shall be designed and constructed to accommodate the turning movements of a Single-Unit Truck (as defined by *AASHTO Geometric Design of Highways and Streets*, Exhibit 2-4, 2004 Edition). The minimum outside turning radius shall be forty (40) feet. The minimum width shall be twelve (12) feet.
- Access roads shall consist of an all weather, drivable surface
- Access roads shall be located within a twenty 20-foot-minimum-width (or as required by the horizontal alignment requirements) parcel or easement, extending from a public or private road
- Access roads shall have a maximum grade of eleven (11) percent
- A paved apron must be provided where access roads connect to paved public roads

The following access road requirements apply only when the City has assumed the responsibility of the maintenance and operation of the facilities, though it is recommended that access roads for privately maintained facilities also be designed to meet these criteria:

- If the maintenance access road is longer than one hundred fifty (150) feet, a turn-around is required at or near the terminus of the access road. Turn-arounds are required for long, winding, or steep condition, regardless of the length of the drive, where backing up would otherwise be difficult

- Turn-arounds shall conform to the City's Standards for Design and Construction

MA-02 <u>Parcels & Easements</u>

Flow control and treatment facilities shall be located within an individual parcel. Stormwater facilities serving commercial projects do not generally require parcels or easements unless they serve more than one parcel.

A stormwater facility, as defined for this section, is a natural drainage way, constructed conveyance, swale, or flow control facility. It is acceptable for other types of drainage systems, such as a pipe, to be in a drainage easement. Other stormwater drainage systems in a drainage easement, such as pipes, shall not straddle private property lines.

<u>Parcels</u>: A drainage parcel for access, maintenance, operation, inspection, and repair shall be dedicated to the entity in charge of the maintenance and operation of the stormwater system. A parcel will be dedicated when any of the following situations are present:

- Facilities associated with a stormwater system serving a residential development are located outside of the public right-of-way.
- Drainage ditches located in residential neighborhoods. The limits of the parcel may have to be delineated with a permanent fence when the ditch is located near property lines; or,
- A natural drainage way is present

Parcels shall be of sufficient width to provide access to, maintain, repair, or replace elements of the stormwater system without risking damage to adjacent structures, utilities and normal property improvements, and without incurring additional costs for shoring or specialized equipment.

<u>Easements</u>: A drainage easement for access, maintenance, operation, inspection, and repair shall be granted to the entity in charge of the maintenance and operation of the stormwater system. The easement shall grant to the City of Polson the right to ingress/egress the easement for purposes of inspection, maintenance, or repair. If not in a parcel, the following infrastructure shall be placed within drainage easement:

- Elements of a stromwater system, such as a pipe, located outside the public right-of-way. Easements for stormwater conveyance pipes shall be of sufficient width to allow construction of all improvements, including any associated site disturbances, and access to maintain, repair or replace the pipe and appurtenances without risking damage to adjacent structures or incurring additional costs for shoring or special equipment.
    - No storm pipe in a drainage easement shall have its centerline closer than five (5) feet to a private rear or side property line.
    - The storm drain shall be centered in the easement.
    - The minimum drainage easement shall be twenty (20) feet.
    - The drainage easement shall not straddle lot lines;
- For drainage ditches and natural drainage ways, the easement width shall be wide enough to contain the runoff from a 100-year, 24-hour storm event for the contributing stormwater basin.

Natural drainage ways (refer to Section III) located on lots larger than 1 acre may be placed in an easement.

- Easements for access roads and turnarounds shall be at least twenty (20) feet wide.

Easement document shall be drafted by the project Owner for review by the City and recorded by the project Owner.

Off-Site Easements:
When a land action proposes infrastructure outside the property boundaries, an off-site easement shall be recorded separately from the plat document, with the clerk and recorders reception number placed on the face of the plat. The easement language shall grant the City of Polson the right to ingress and egress for purposes of routine or emergency inspection and maintenance. The following shall be submitted to the City for review:

- A legal description of the site stamped and signed by a licensed surveyor
- An exhibit showing the entire easement limits and easement bearings, stamped and signed by a licensed surveyor
- Proof of ownership for the affected parcel and a list of signatories
- Copy of the draft easement

For plats and binding site plans, the off-site drainage facility shall be clearly identified on the plans and operation and maintenance responsibilities shall be clearly defined prior to acceptance of the project.

SECTION V
CONSTRUCTION STANDARDS

CS-01 Project Requirements

Contractors installing water, sanitary sewer, storm sewer and roadways or any other public improvements shall be subject to the following requirements:

Construction Contractor Registration: Any Contractor working within all existing Public Right-of-Way or Easement shall be registered with the Montana Department of Labor and Industry, Employment Relations Division.

Insurance and Bonding: Insurance and bonding shall be in accordance with Section GP-11 and GP-12, as applicable.

Statement of Ability & Experience: The Contractor may be required to submit a statement of work completed of a similar nature within the past twenty-four (24) months. The Statement shall include the name, address, and phone number of each reference. The Contractor may include any other information deemed appropriate by the Public Work Director.

Pre-Construction Conference: Prior to any construction start, a preconstruction conference shall be held. The Public Works Department, the Project Engineer, the Owner, and the Contractor shall be represented. Items to be discussed at the pre-construction conference are construction schedule, shop drawing submittals, utility installation, materials testing, quality control, maintenance bond, and other items as may be necessary.

Shop Drawing Submittal: The City shall be provided with a copy of the approved shop drawings for all projects no later the ten (10) business days prior to proposed installation.

CS-02 Construction Standards

All water, sanitary sewer, storm drainage, and roadway systems, or any other construction of infrastructure within the public right-of-way or easement, shall be constructed, inspected, and tested in accordance with the current edition of The Montana Public Works Standard Specifications and the Standards for Design & Construction of the City of Polson and other standards referenced elsewhere in this document. With respect to the design and/or construction of public facilities, any conflict(s) or difference(s) between the Montana Public Works Standard Specifications, the City of Polson Development Code, and the City of Polson Standards for Design & Construction shall be resolved in favor of the City of Polson Standards for Design & Construction.

Underground Utilities: All underground electrical, gas, phone, and TV cable lines must be installed at least three (3) feet horizontally from water, sanitary sewer and storm sewer mains and services.

CS-03 Site Maintenance

The developer and contractor shall schedule and control their work so as to minimize hazards to public safety, health, and welfare.

Streets shall be kept free of dirt and debris on a continuous basis.

Pedestrian facilities shall be kept free of obstruction, shall be made passable to a width of five (5)-feet, and continuity shall be maintained at all time unless otherwise approved by the Public Works Department.

On existing streets, two-way traffic shall be maintained at all times unless detour plans have been approved in advanced by the City.

Pedestrian and vehicular access to occupied buildings shall be maintained at all times except where approval from the building owner has been obtained in writing.

Adherence to the project's erosion and sediment control plan will be required. Features contained therein, such as silt fences, check dams, and sedimentation ponds shall be maintained in good working order to the satisfaction of the City.

CS-04 Water & Sewer Service Construction: When it is necessary to tap an existing main for a service connection, the Customer or his Contractor shall provide all equipment, labor and materials to tap the main, install the service line from the main to the point of service and restore the pavement or other surface in the public right-of-way to its preconstruction condition. The Public Works Department must be notified 48 hours prior to start of work.

CS-05 Construction Inspection, Testing, & Quality Control

A Professional Engineer, or his designated representative, shall provide construction inspection and testing as required. Inspection and testing shall be in accordance with the current edition of the Montana Public Works Standard Specifications and the Standards for Design & Construction, Polson, MT. The following quality control procedures will apply to all utility and roadway construction projects. The City reserves the right to conduct independent quality control testing at the City's expense during any phase of the construction. The Contractor shall bear the expense of failed tests and the expense of bringing the material into conformance with the required specifications.

1. All water main valves and fittings, fire hydrants, sewer manholes, wet wells, and sewer/water main crossings shall be inspected and approved by the Professional Engineer, or his designated representative, prior to backfilling.

2. A Professional Engineer, or his designated representative, shall be present for all tests required in Section 02660, and Section 02720, and of the Montana Public Works Standard Specifications. A written record of all test results shall be submitted to the Public Works Department.

3. A Professional Engineer, or his designated representative, shall provide the Public Works Department with photocopies of daily inspection reports, including Proctors and compaction test results for all projects. These reports shall be submitted on a weekly basis.

The following minimum compaction testing procedures shall apply to all utility and roadway construction projects. An independent testing laboratory shall be retained to provide the following tests and frequency. Random longitudinal test locations are required. The following are minimum compaction test requirements. The Professional Engineer, or his designated representative, may require additional tests. For projects containing less than three hundred (300) linear feet of improvements, a minimum of one compaction test for each improvement shall be required for the improvements listed below.

1. Utility Trenches and Underground Structures:

For trenches up to eight (8) feet in depth, density tests shall be taken at twelve (12) inches above the pipe at one-half the trench depth and at the surface. For trenches greater than eight (8) feet in depth, density tests shall be taken at twelve (12) inches above the pipe, at one-third and two-third the trench depth levels, and at the surface.

The minimum density shall be 95% Standard Proctor, ± 3% optimum moisture.

Horizontal Frequency:

1. Utility Mains - One set of tests per three hundred (300) feet.
2. Service Lines - One set of tests per three (3) services per utility type.
3. Open Pit - Minimum of one test (Open Pit - at each manhole, water valve, storm inlet, curb inlet, vault, etc.)
   Each test location shall be separated horizontally from a prior test location.
4. Street sub grade:
   All sub-base: 95% Standard Proctor, + 3% optimum moisture, One random density test, every three hundred (300) linear feet of street.

   All crushed gravel base: 95% Standard Proctor, + 3% optimum moisture. One random density test, every three hundred (300) linear feet of street.

Television Inspection: The City of Polson reserves the right to inspect all underground utility systems by the use of a television camera prior to acceptance. Any deficiencies shall be corrected at the Contractor's expense.

CS-06 Record Drawings & Project Acceptance

Upon project completion and before final acceptance, a Professional Engineer shall certify to the City that the construction of the public utilities and roadways meets the requirements of the approved construction documents.
The Engineer shall submit and verify:

1. two sets of record drawings (hard copy and DWG digital format)

2. One set of all the compliance test results as required per these standards and MPWSS
3. A written checklist including:

   Water System Data

   a. Hydrant test results (static, flowing, and residual pressure)
   b. Hydrant locations (physical address, GPS coordinates
   c. Ensure hydrant valve is off and main valve is on
   d. Water system test results (pressure test and bac-t)
   e. Water valves to be in the on position (expect those on dead end future extensions)
   f. Valve boxes must be tested for centered vertical alignment

   Sewer System

   g. Pressure test results
   h. Step alignment is adequate for access
   i. Grout is applied
   j. Manhole alignment meets design tolerances

The City will not accept the project until record drawings and test results have been approved by the City and all fees have been paid. The one (1)-year maintenance guarantee period will begin on the date slated in accordance with Section GP-12 Maintenance Bond for New Infrastructure.

CS-07 One-Year Guarantee Inspection

The Project Engineer, or his designated representative, shall conduct a one-year guarantee inspection, to be attended by a representative from the Public Works Department. The inspection shall take place not less than sixty (60) days prior to the expiration date of the Maintenance Bond. The maintenance bond will be released when all deficiencies have been corrected to the satisfaction of the City Engineer. The City Engineer, the Project Engineer, or his designated representative, shall notify the Principal as listed in the Maintenance Bond of any work found to be not in accordance with the approved construction documents. The Principal shall restore the work to meet the requirements of the approved construction documents prior to the release of the Maintenance Bond. The City expressly reserves the right to draft the Maintenance bond for repairs not completed by the Owner, Developer, or Contractor within thirty (30) calendar days of being advised that repairs are required.

CS-08 Boulevard Landscaping

The Contractor shall place a minimum of four (4) inches of topsoil within the boulevard. The finished surface of the topsoil shall provide adequate drainage from the top of the sidewalk to the top of the curb. Topsoil shall be fertile, natural loam surface soil, free of clay, weeds, roots or stones larger than one inch in any dimension. Prior to placing topsoils, the existing soil shall be scarified to a depth of eight (8) inches. Boulevard landscaping shall be placed in accordance with the Polson Street Tree Ordinance and a plan approved by the City of Polson Tree Commission.

CS-09 Protection of Trees

Per the City of Polson's Ordinance #501, all trees on any street or other publicly owned property near any excavation or construction of any building, structure, or street work, shall be guarded with a good substantial fence, frame, or box. All building material, dirt or other debris shall be kept outside the barrier.

It is unlawful for any person to excavate any ditches, tunnels, trenches, or lay drive within a radius of ten (10) feet of any public tree without first obtaining permission from the Superintendent of Parks & Streets and the Public Works Director. Maintenance or repair work on existing underground utilities will be permitted. Excavation for new utilities and structure within a radius of ten (10) feet of any public tree will not be permitted unless approved by the Tree Commissioner.

SECTION VI

STANDARD DRAWINGS

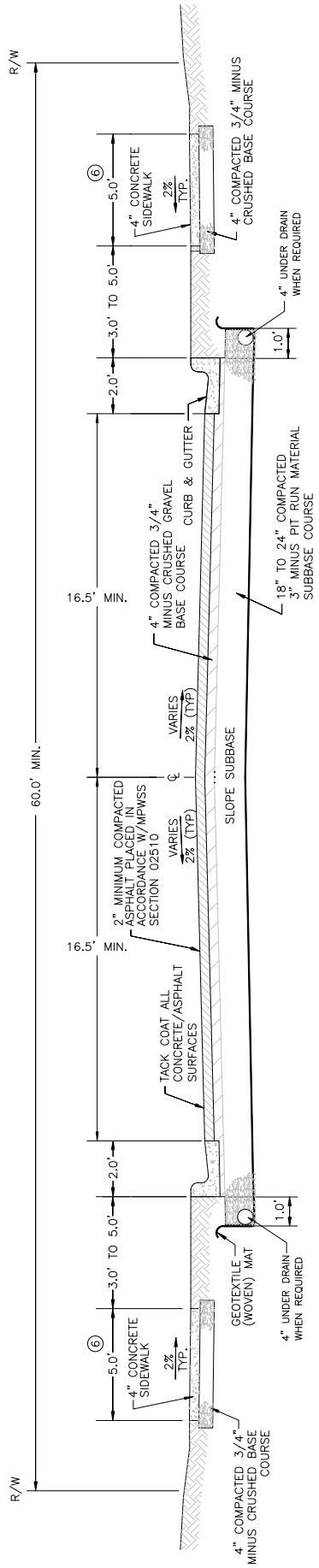

1. Thicknesses of asphalt, 3/4" crushed gravel and sub-base shall be as shown unless an alternate design is approved. The City may accept an alternate street design from a Professional Engineer if the traffic loads and soil analysis justify different requirements. The final street design must be approved by the City Engineer.

2. The width of pavement may depend on local conditions such as width of existing streets in the area, anticipated traffic volumes, future extensions, etc.

3. The width of the R/W may have to be increased due to road slopes, utilities, traffic volume, or other equirements.

4. Unless otherwise approved by the City Engineer all topsoiled areas to be sodded by the Developer.

5. The maximum grade shall be 8%.

6. The sidewalks for commercial or industrial zoned areas shall be 10'.

7. Trails shall be installed over properly compacted sub-grade & consist of a minimum 2" of hot mix asphalt over a minimum base of 18" of 3 inch minus gravel. The compacted sub-grade and base shall extend at least 2" beyond the asphalt surface on both sides of the trail.

8. Sidewalks shall have expansion joints every 5' and compacted base course shall extend 2" beyond the concrete surface on both sides of the walk.

CONSTRUCTION STANDARDS CITY OF POLSON	STANDARD ARTERIAL STREET	SD-00

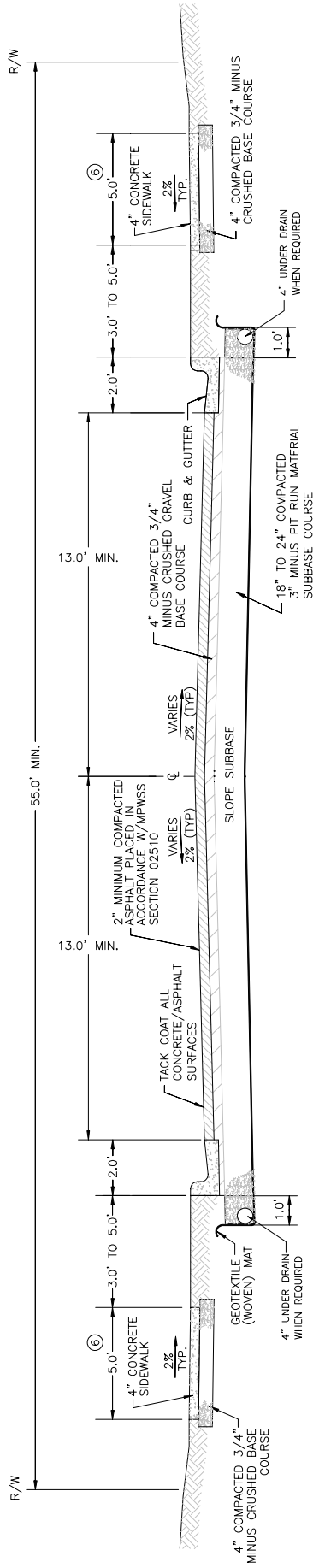

1. Thicknesses of asphalt, 3/4" crushed gravel and sub-base shall be as shown unless an alternate design is approved. The City may accept an alternate street design from a Professional Engineer if the traffic loads and soil analysis justify different requirements. The final street design must be approved by the City Engineer.

2. The width of pavement may depend on local conditions such as width of existing streets in the area, anticipated traffic volumes, future extensions, etc.

3. The width of the R/W may have to be increased due to road slopes, utilities, traffic volume, or other equirements.

4. Unless otherwise approved by the City Engineer all topsoiled areas to be sodded by the Developer.

5. The maximum grade shall be 8%.

6. The sidewalks for commercial or industrial zoned areas shall be 10'.

7. Trails shall be installed over properly compacted sub-grade & consist of a minimum 2" of hot mix asphalt over a minimum base of 18" of 3 inch minus gravel. The compacted sub-grade and base shall extend at least 2" beyond the asphalt surface on both sides of the trail.

8. Sidewalks shall have expansion joints every 5' and compacted base course shall extend 2" beyond the concrete surface on both sides of the walk.

CONSTRUCTION STANDARDS CITY OF POLSON	STANDARD COLLECTOR STREET	SD-01

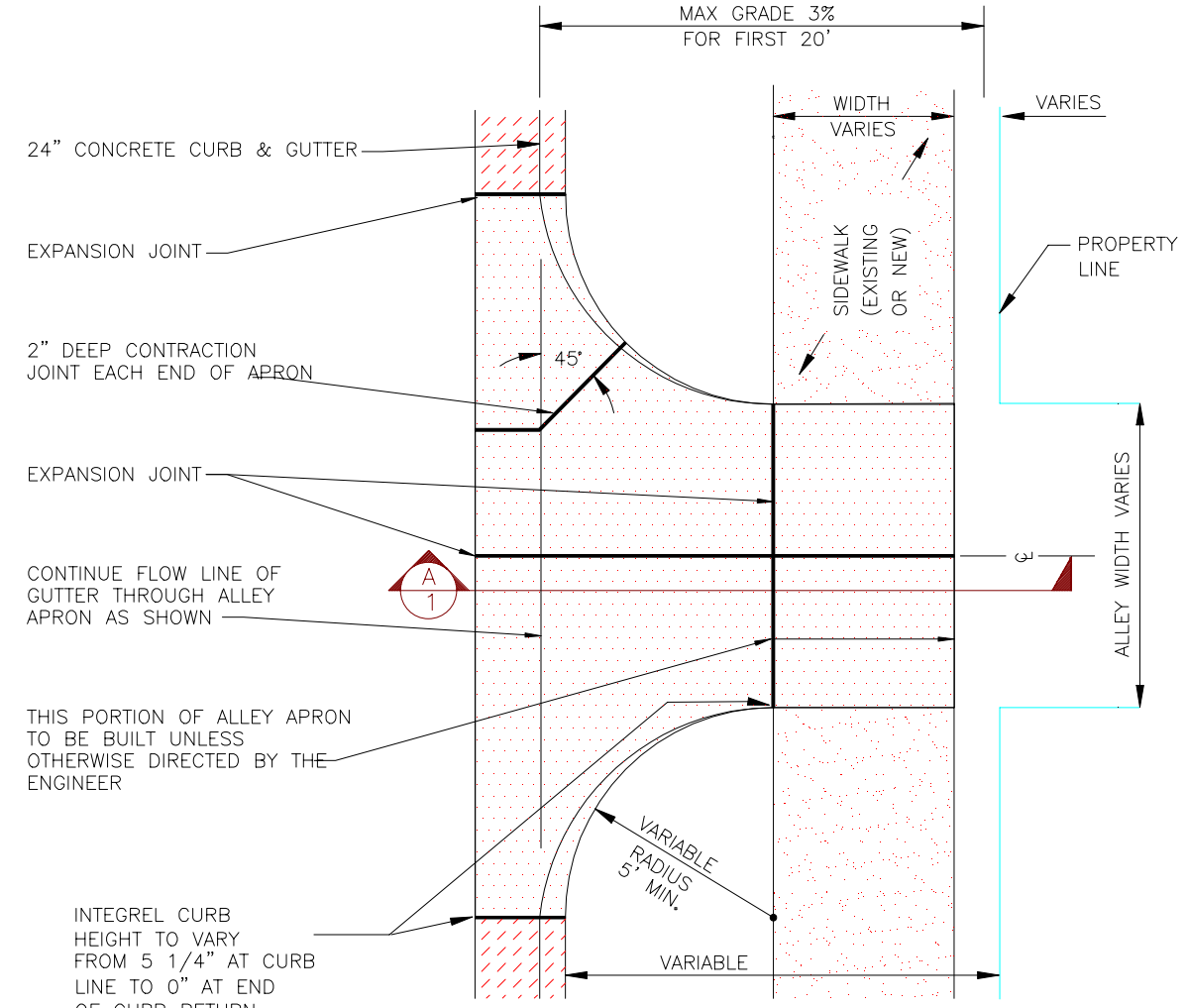

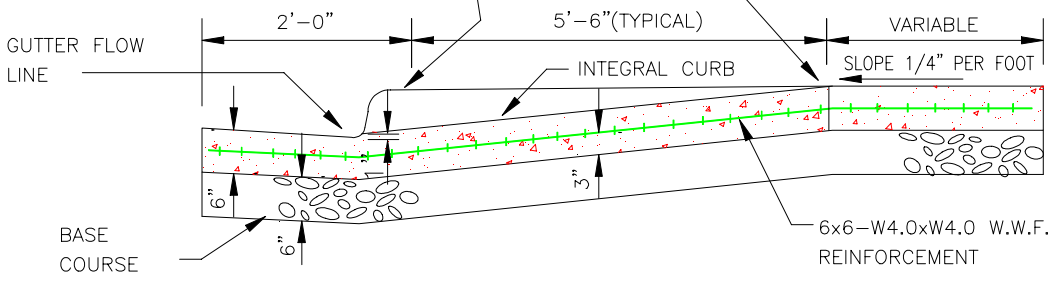

SECTION A/1

CONSTRUCTION STANDARDS CITY OF POLSON	STANDARD ALLEY APRON	SD-04

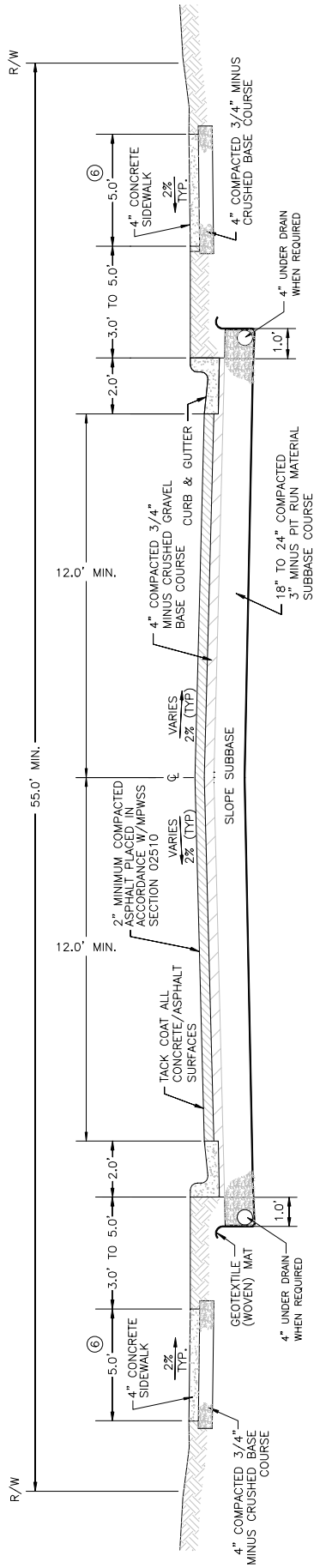

1. Thicknesses of asphalt, 3/4" crushed gravel and sub-base shall be as shown unless an alternate design is approved. The City may accept an alternate street design from a Professional Engineer if the traffic loads and soil analysis justify different requirements. The final street design must be approved by the City Engineer.

2. The width of pavement may depend on local conditions such as width of existing streets in the area, anticipated traffic volumes, future extensions, etc.

3. The width of the R/W may have to be increased due to road slopes, utilities, traffic volume, or other equirements.

4. Unless otherwise approved by the City Engineer all topsoiled areas to be sodded by the Developer.

5. The maximum grade shall be 8%.

6. The sidewalks for commercial or industrial zoned areas shall be 10'.

7. Trails shall be installed over properly compacted sub-grade & consist of a minimum 2" of hot mix asphalt over a minimum base of 18" of 3 inch minus gravel. The compacted sub-grade and base shall extend at least 2" beyond the asphalt surface on both sides of the trail.

8. Sidewalks shall have expansion joints every 5' and compacted base course shall extend 2" beyond the concrete surface on both sides of the walk.

CONSTRUCTION STANDARDS CITY OF POLSON	STANDARD LOCAL STREET	SD-02

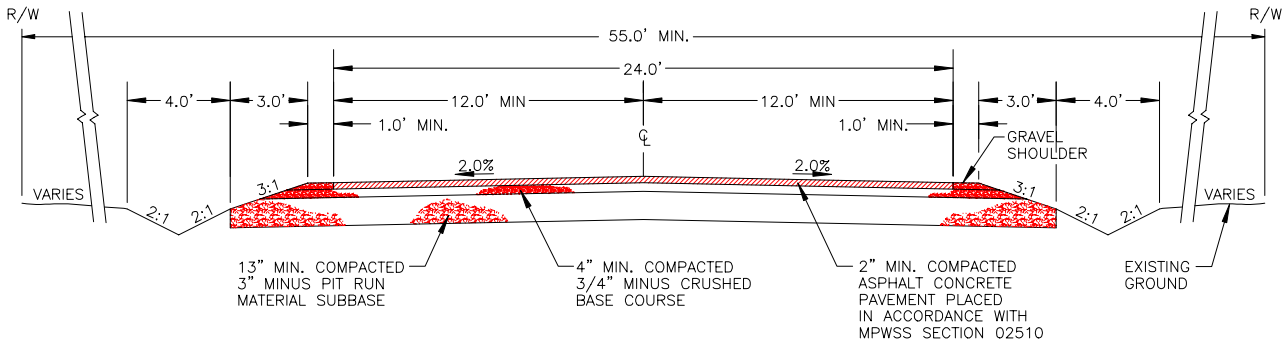

1. Thicknesses of asphalt, 3/4" crushed gravel and sub-base shall be as shown unless an alternate design is approved. The City may accept an alternate street design from a Professional Engineer if the traffic loads and soil analysis justify different requirements. The final street design must be approved by the City engineer.

2. The width of pavement may depend on local conditions such as width of existing streets in the area, anticipated traffic volumes, future extensions, etc.

3. The width of the R/W may have to be increased due to road slopes, utilities, traffic volume or other equirements.

4. Unless otherwise approved by the City Engineer all topsoiled areas to be sodded by the Developer.

5. The maximum grade shall be 8%.

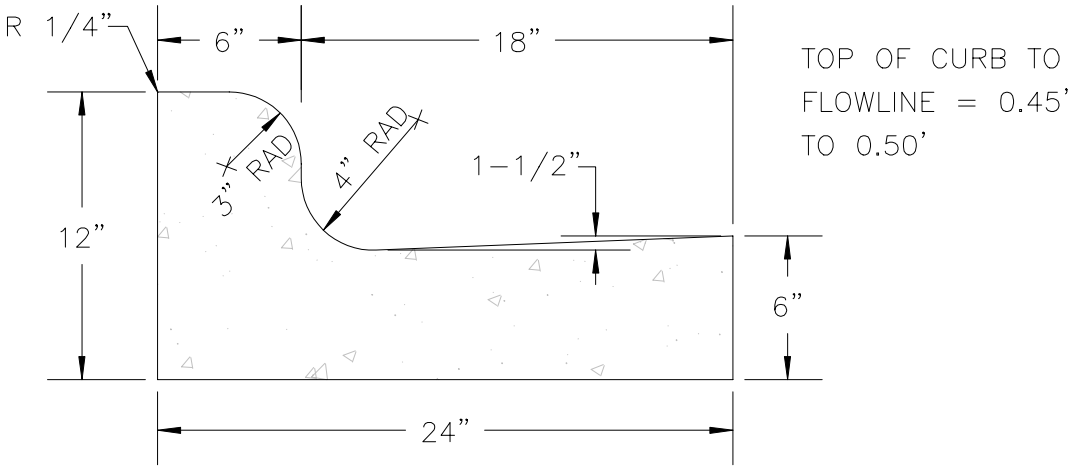

1. 1 /2" expansion joint material shall be placed at the P.C. and the PT.. 2. Contraction joints shall be placed at every 15' of curb length and shall have a minimum depth of 3/4" and minimum width of 1/8". Contraction joints shall be constructed by sowing or scoring. A tool hall be used which will leave corners rounded and destroy aggregate interlock for the specified minimum depth. 3. Grade, alignment and forms shall be inspected by the City prior to pouring. 4. Concrete shall be M4000 with 3/4 inch maximum aggregate and a 28-day strength of 4000 PSI, 5% to 8% air content with o maximum slump of four (4) inches.
5. Individual contractors forms may vary slightly from this pattern. Patterns which achieve essentially the same result as the above pattern may be approved by the City. 6. Four inches of base material is requried. Base material shall be 3/4" crushed gravel compacted to 95% per AASHTO T 99.

CONSTRUCTION STANDARDS CITY OF POLSON	STANDARD CURB & GUTTER	SD-05

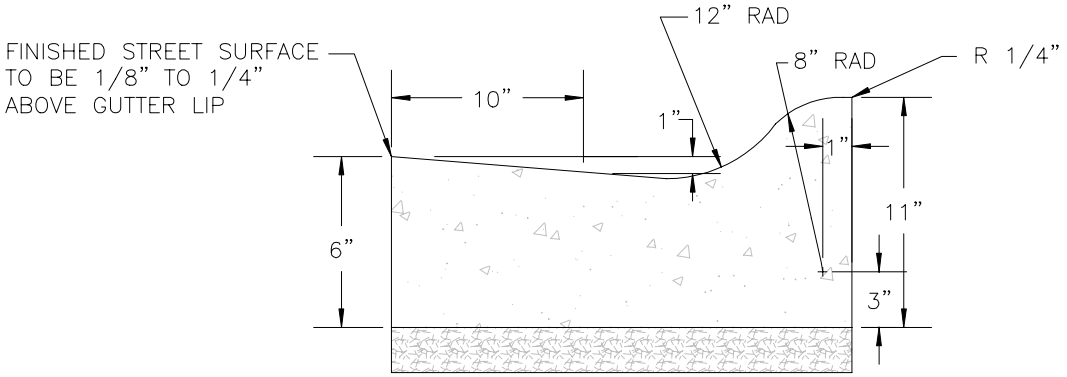

1. This curb does not meet handicapped access requirements and should not be used for access ramps. 2. 1/2" expansion joint material shall be placed at the P.C. and the PT.. 3. Contraction joints shall be placed at every 15' on tangent & every 5' on curves of curb length and shall have a minimum depth of 3/4" and minimum width of 1/8". Contraction joints shall be constructed by sawing or scoring, A tool shall be used which will leave corners rounded and destroy aggregate interlock for the specified minimum depth. 4. Grade, alignment and forms shall be inspected by the City prior to pouring. 5. Concrete shall be M4000 with 3/4 inch maximum aggregate and a 28-day strength of 4000 P.S.I., 5Z to 8 air content with a maximum slump of four (4) inches. 6. Three inches of base material is required. Base material shall be 3/4" crushed gravel compacted to 95% per AASHTO T 99.

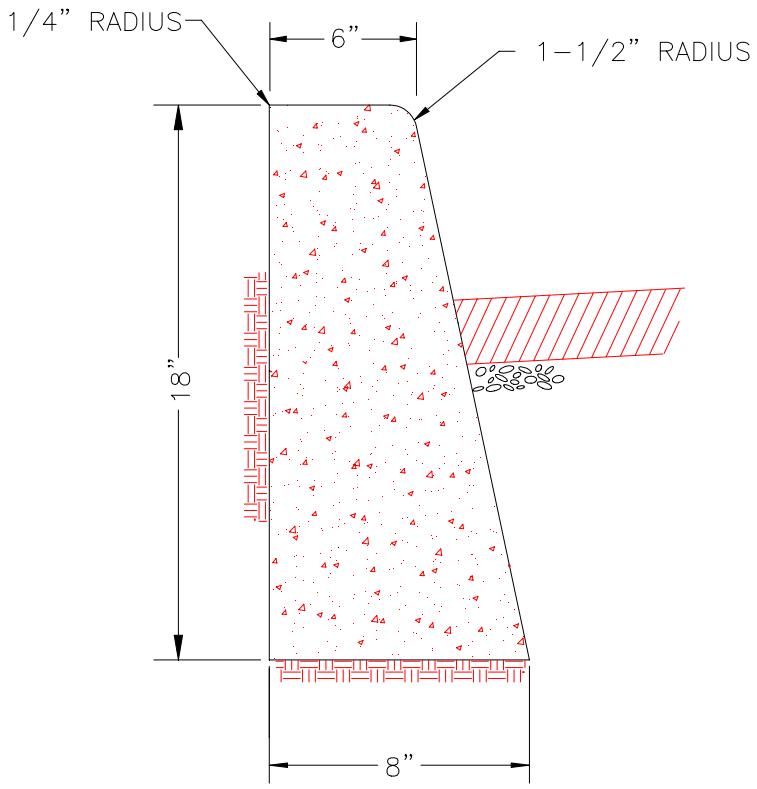

1. 1/2" expansion joint material shall be placed at the P.C., and the PT., and at 45' maximum spacing. 2. Contraction joints shall be placed at every 15 feet of curb length and shall have a minimum depth of 3/4" and minimum width of 1/8". Contraction joints shall be constructed by sawing or scoring. When scoring, a tool shall be used which will leave corners rounded and destroy aggregate interlock for the specified minimum depth. 3. Grade, alignment and forms shall be inspected by the City prior to pouring. 4. Concrete shall be M4000 with 3/4 inch maximum aggregate and a 28-day strength of 4000 PSI, 5% to 8% air content with a maximum slump of four (4) inches. 5. Individual contractors forms may vary slightly from this pattern. Patterns which achieve essentially the same result as the above pattern may be approved by the City. 6. Four inches of base material is required. Bose material shall be 3/4" crushed gravel compacted to 95 per AASHTO T 99. 7. Use of straight curb is restricted to specific application and shall require prior approval from the City Engineer.

CONSTRUCTION STANDARDS CITY OF POLSON	STANDARD STRAIGHT CURB	SD-07

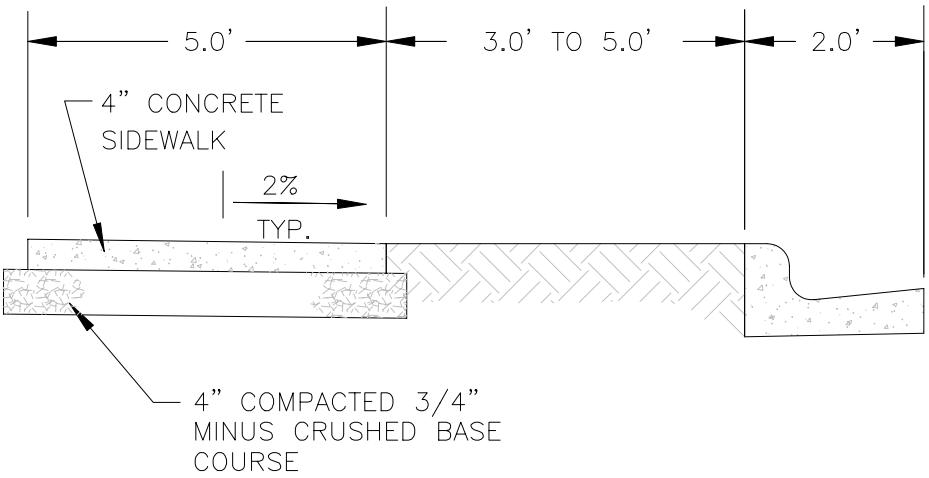

1. Concrete shall be M4000 with 3/4 inch maximum aggregate and a 28-day strength of 4000 PSI, 5% to 8% air content with o maximum slump of four (4) inches.
2. Contraction joints shall be spaced the same dimension as the width but not to exceed 5 feet each way. Contraction joints shall be constructed by sawing or scoring. A tool shall be used which will leave corners rounded and destroy aggregate interlock for the specified minimum depth. Contraction joints shall be a minimum of 1/4 of the total depth of the concrete.
3. All sidewalks greater than six feet in width shall be sawcut longitudinally lengthwise down the center a minimum of 1/4 the total depth of the concrete.
4. Expansion joints, using 1/2" material shall be spaced at intervals of 45' maximum.
5. All edges and joints shall be rounded with an edging tool of a minimum 1/4" radius.
6. Four inches of base material is required. Base material shall be 3/4" crushed gravel compacted to 95% per AASHTO T 99, or sand thoroughly compacted in place.
7. Grade, alignment and forms shall be inspected by the City or their designated inspector prior to pouring.
8. All concrete driveway sections shall be six (6) inches thick.

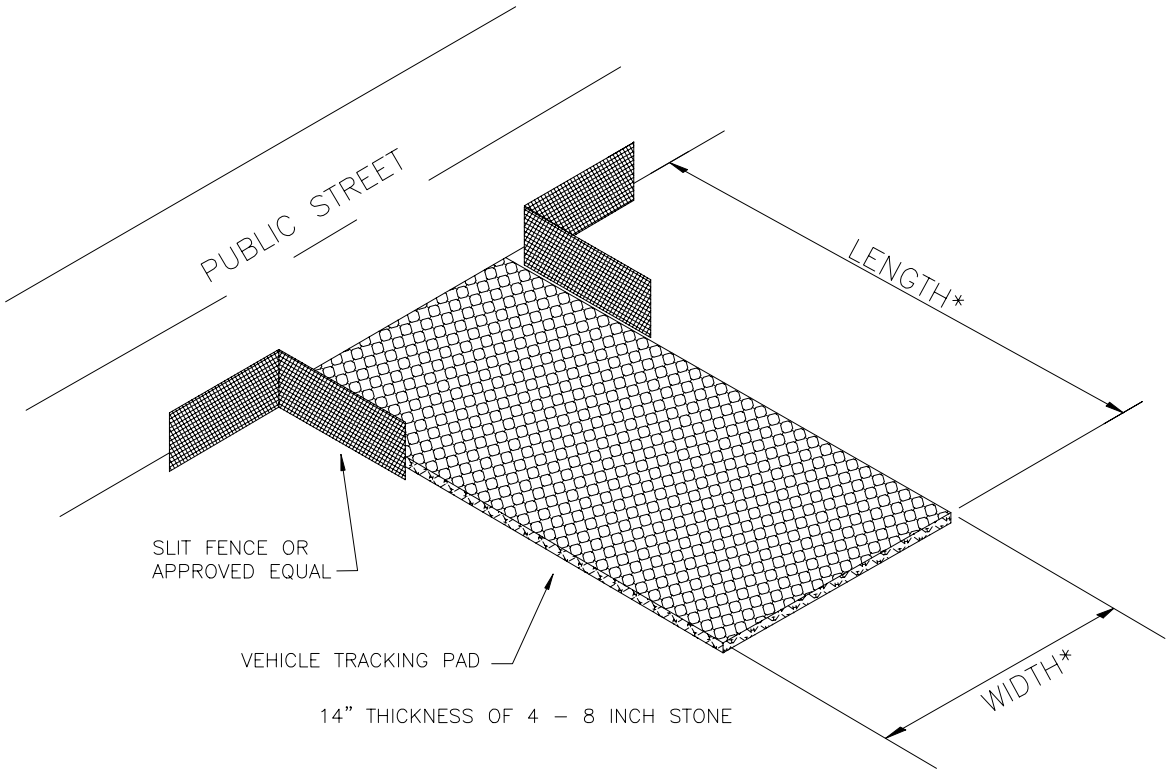

	MINIMUM LENGTH*	MINIMUM WIDTH*
RESIDENTIAL	30 FEET	15 FEET
COMMERCIAL/BUSINESS	40 FEET	25 FEET

All vehicles entering and exiting the construction site must go across the rock pad to prevent mud and dirt from tracking offsite. Rock shall be replenished if tracking occurs. All materials spilled, dropped, washed or tracked from vehicles onto roadways must be removed immediately. Use of geotextile fabric may be required for some site conditions.

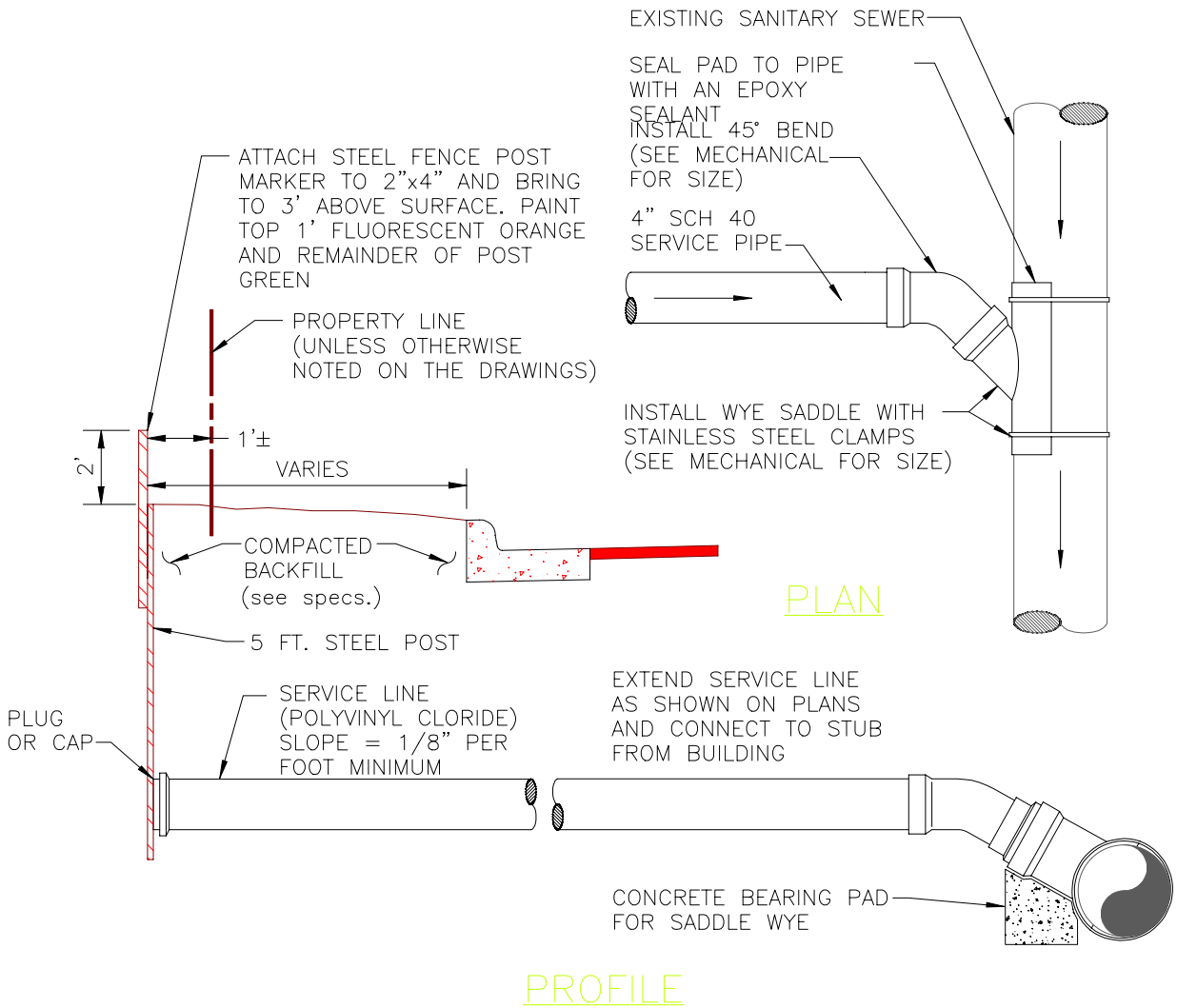

1. This type of connection shall be used on mains of 15 inches or larger diameter. 2. Hub or bell of equal diameter and type of pipe which will be used for the service line shall be used for the connection fitting to the existing main. 3. Hub or bell must not protrude more than 1/4 inch into existing mains. 4. All connections to mains shall be watertight. A fillet of grout or epoxy shall be applied around the diameter of the hub or bell to assure a watertight or leakproof connection. 5. This type of connection shall be approved be the City prior to installation. 6. All construction phases of this type of connection shall be inspected by the City of Whitefish's Public Works Department.

7. Lines under 15" I.D. will require a saddle.

CONSTRUCTION STANDARDS CITY OF POLSON	STANDARD SEWER SERVICE CONNECTION	SD-10

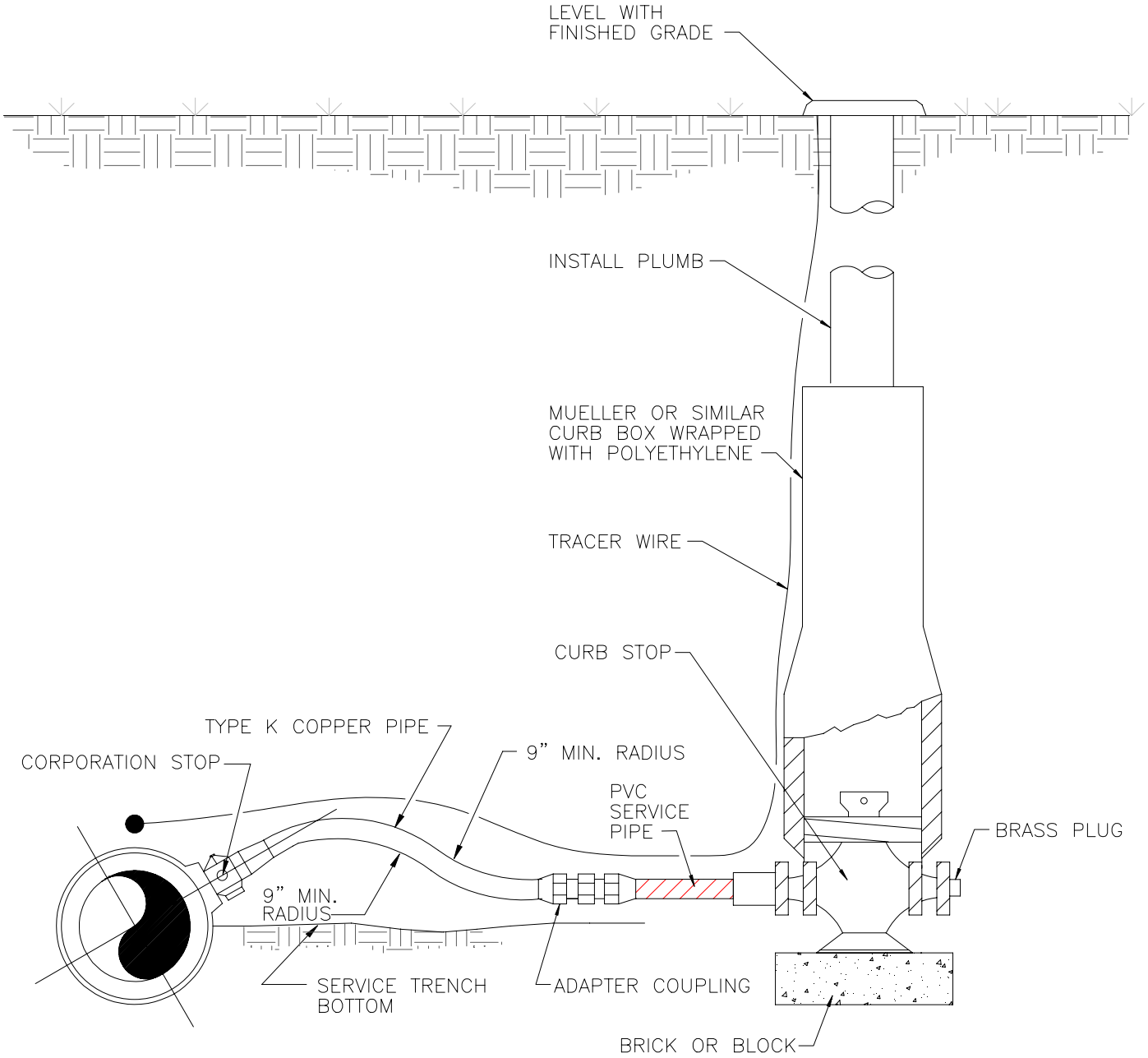

CONSTRUCTION STANDARDS CITY OF POLSON	STANDARD WATER SERVICE LINE	SD-11

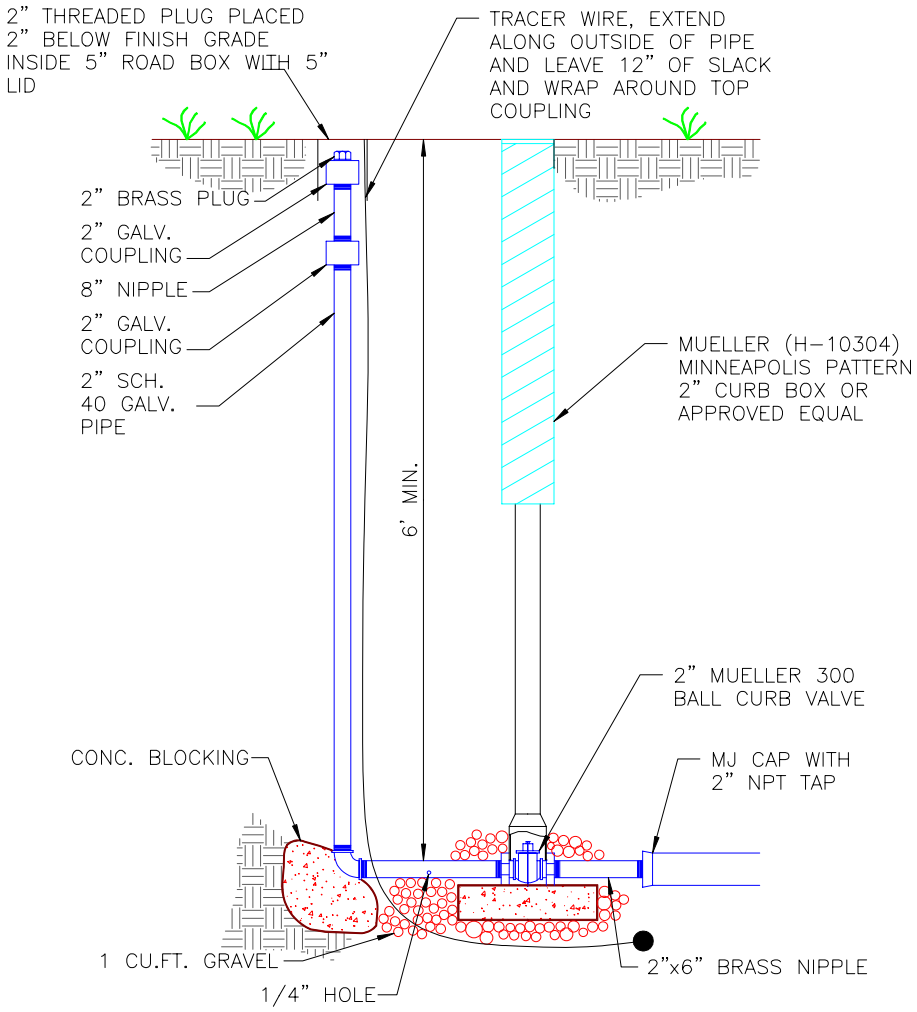

CONSTRUCTION STANDARDS CITY OF POLSON	STANDARD 2" BLOW-OFF DETAIL	SD-12

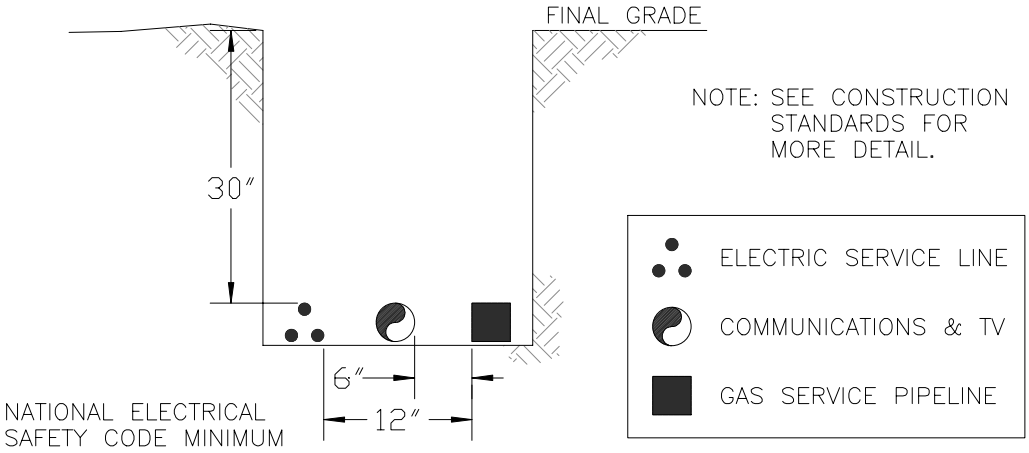

CONSTRUCTION STANDARDS CITY OF POLSON	STANDARD DRY UTILITY TRENCH	SD–13

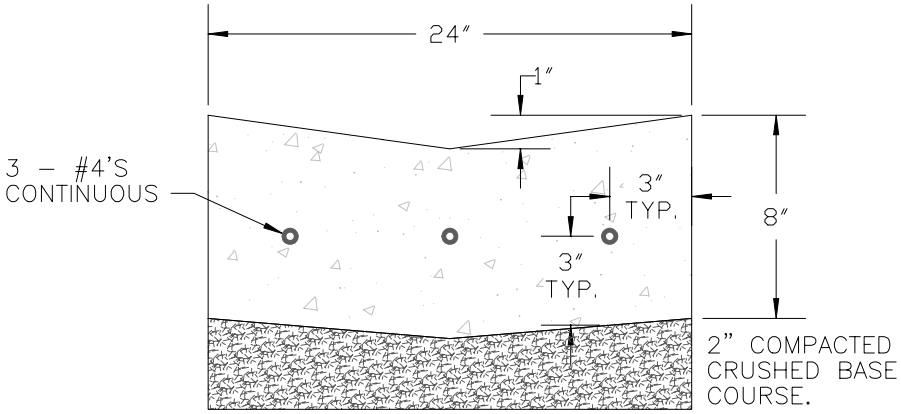

1. 1/2" expansion joint material shall be placed at the P.C. and the PT..
2. Contraction joints shall be placed at every 15' of curb length and shall have a minimum depth of 3/4 inch and minimum width of 1/8 ". Contraction joints shall be constructed by sawing or scoring, A tool shall be used which will leave corners rounded and destroy aggregate interlock for the specified minimum depth. 3. Grade, alignment and forms shall be inspected by the City prior to pouring.
4. Concrete shall be M–4000 with 3/4 inch maximum aggregate and a 28–day strength of 4000 P.S.I., 5Z to 8 air content with a maximum slump of four (4) inches. 5. Four inches of base material is required. Base material shall be 3/4" crushed gravel compacted to 95% per MSHTO T99.

CONSTRUCTION STANDARDS CITY OF POLSON	STANDARD VALLEY GUTTER	SD–14

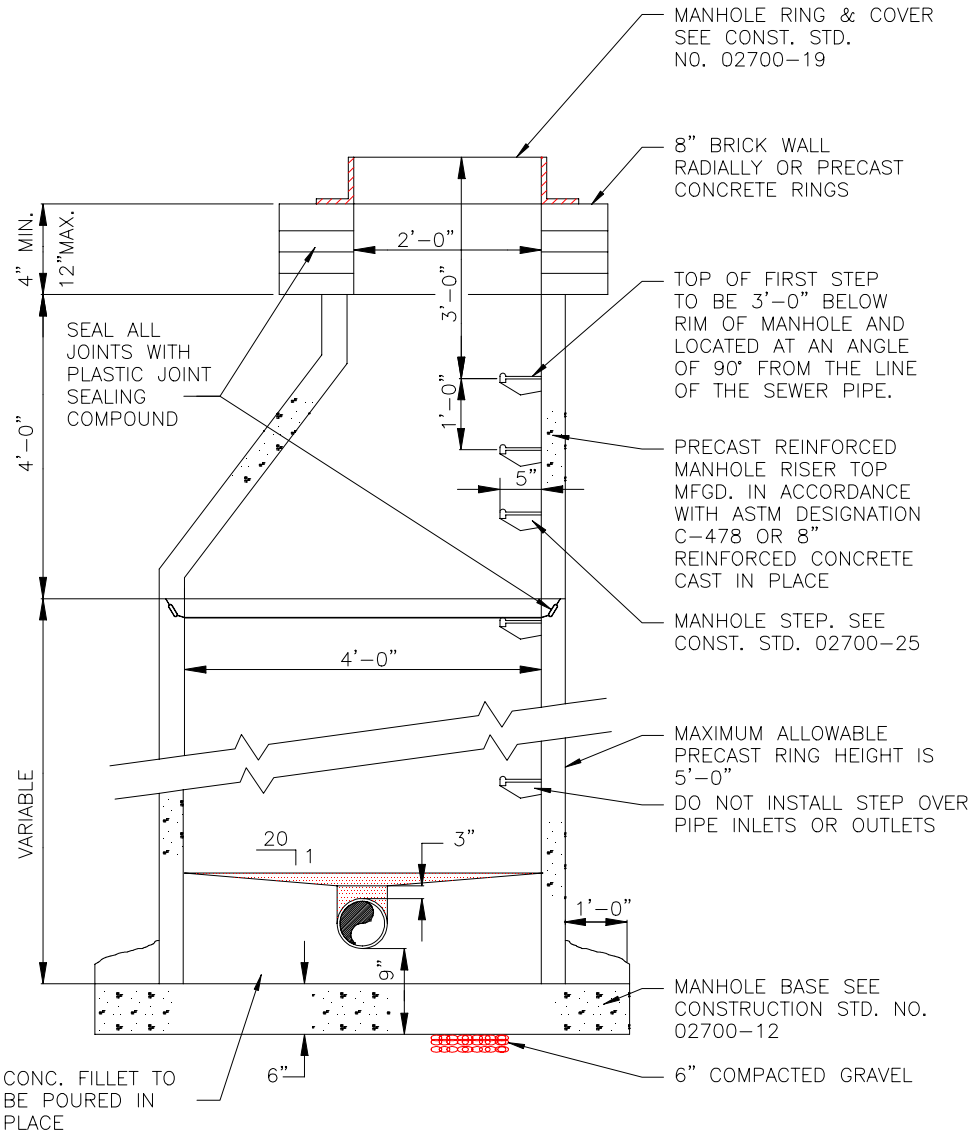

NOTE: MANHOLE DEPTH TO BE MEASURED VERTICALLY FROM LOWEST INVERT TO TOP OF FRAME.

CONSTRUCTION STANDARDS CITY OF POLSON	STANDARD MANHOLE	SD–15

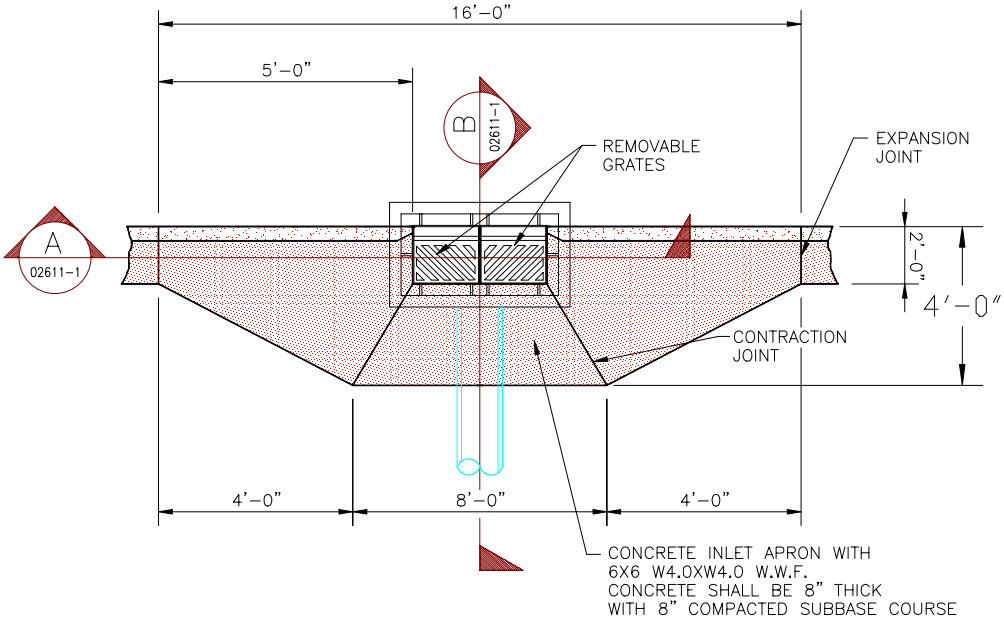

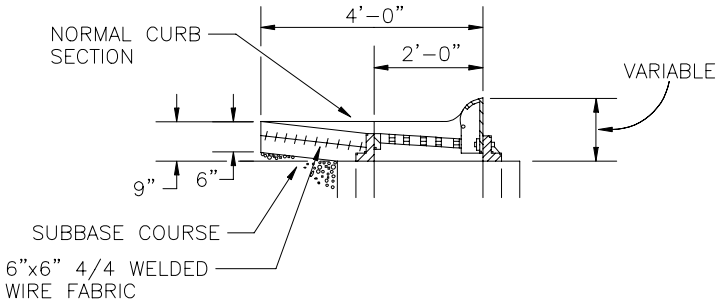

SECTION B-B

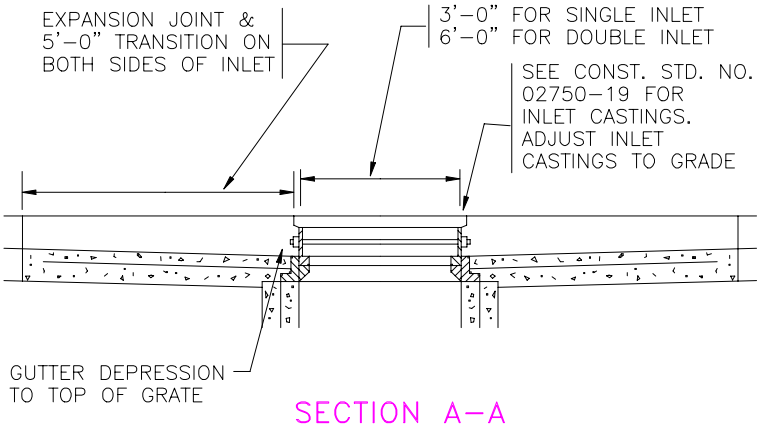

SECTION A-A

CONSTRUCTION STANDARDS CITY OF POLSON	STANDARD INLET & GRATE	SD-16

SIGN SPECIFICATIONS

ALL SIGN BLANKS SHALL BE .080 GAUGE FLAT ALUMINUM STOCK.

STREET NAME SIGN BLANKS SHALL BE 9" IN HEIGHT. LENGTH SHALL BE DETERMINED BY THE STREET NAME.

STOP SIGN FACES SHALL BE 3M HIGH INTENSITY GRADE REFLECTIVE SHEETING OR APPROVED EQUAL.

STREET NAME SIGN BACKING SHALL BE 3M GREEN 3277 ENGINEER GRADE REFLECTIVE SHEETING OR APPROVED EQUAL.

STREET NAME SIGN LETTERING SHALL BE 3M WHITE 3290 ENGINEER GRADE REFLECTIVE SHEETING OR APPROVED EQUAL. LETTERING SHALL BE 6" HIGH IN CAPITAL LETTERS.
STOP SIGNS SHALL BE ATTACHED TO THE SIGN POST WITH A U-BOLT STYLE SIGN MOUNTING CLAMP.

STREET NAME SIGNS SHALL BE ATTACHED TO THE TOP OF THE SIGN POST WITH A ROUND CAP SIGN HOLDER WITH A 6" LONG MOUNTING BRACKET. A 6" LONG 90° CROSSPIECE SHALL BE USED FOR DUAL SIGN APPLICATIONS.

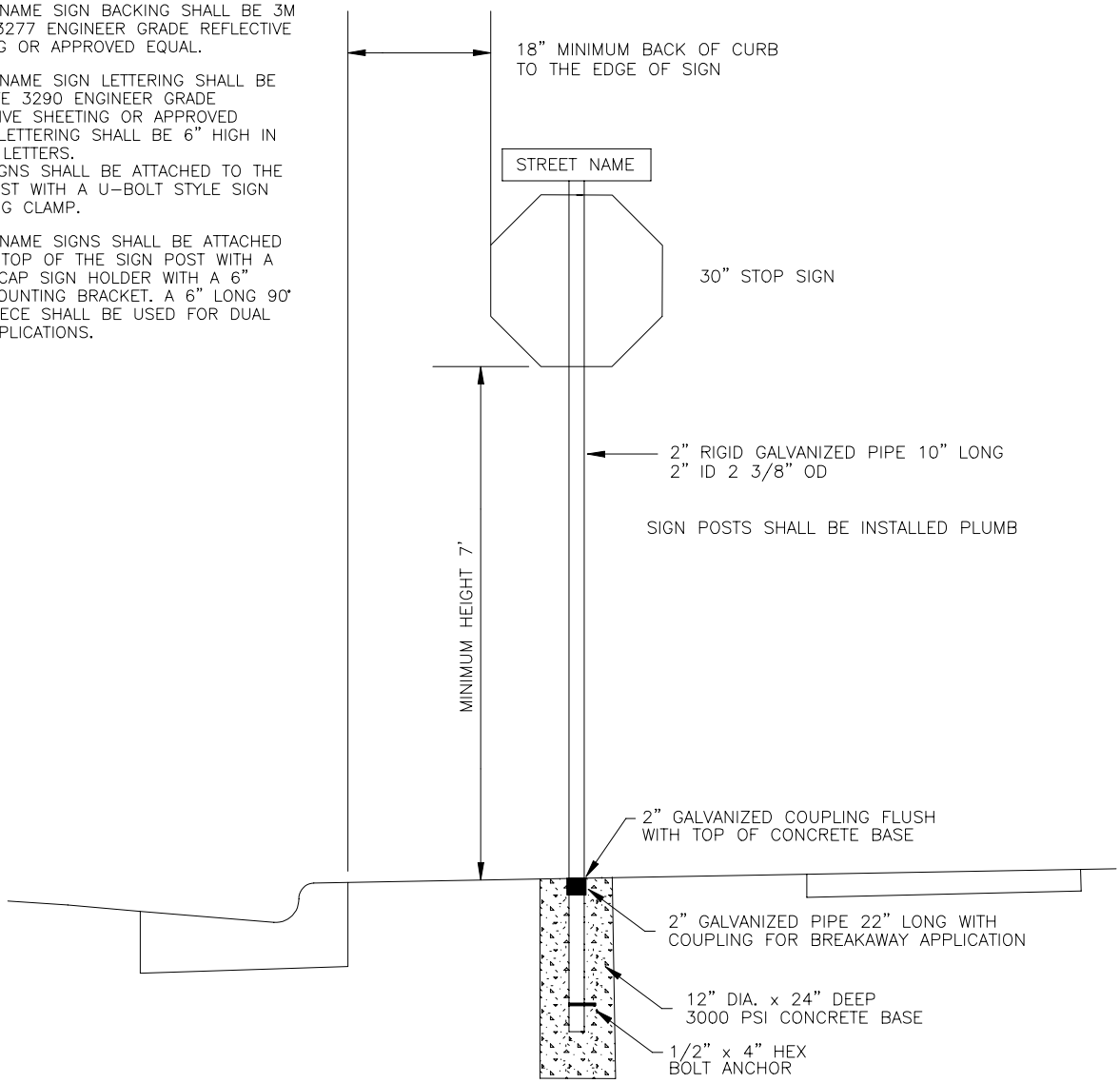

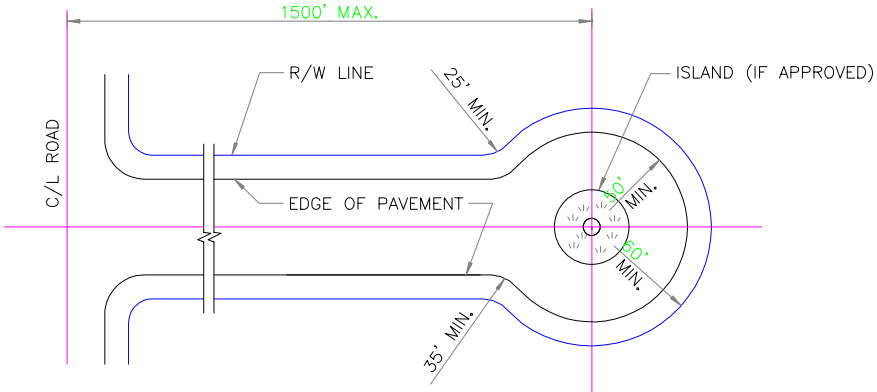

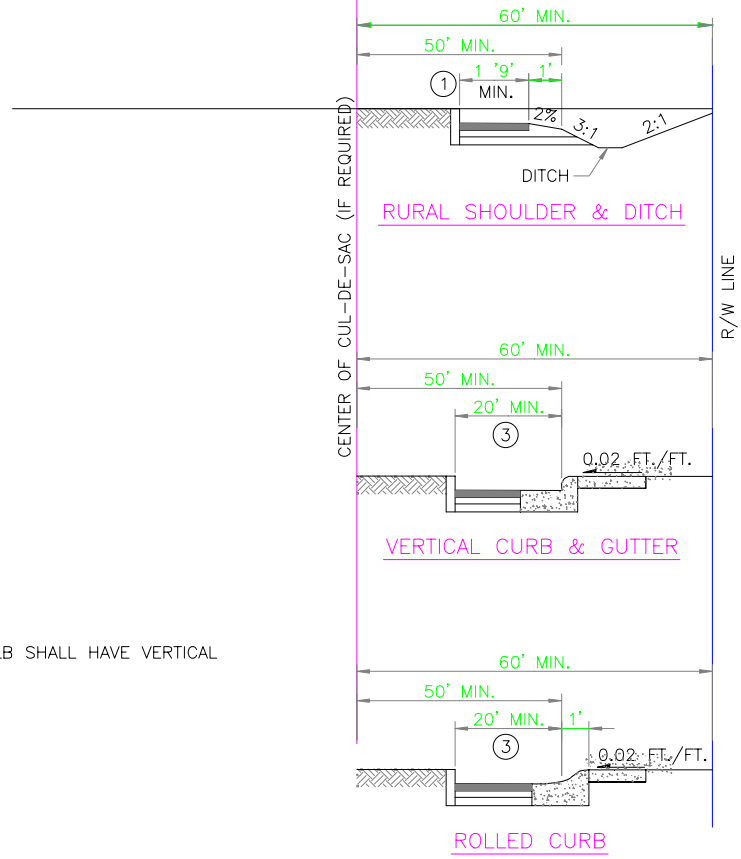

NOTES:

1. ISLAND AT CENTER OF BULB SHALL HAVE VERTICAL OR EXTRUDED CURB. SEE

CONSTRUCTION STANDARDS CITY OF POLSON	STANDARD CUL-DE-SACS	SD-18

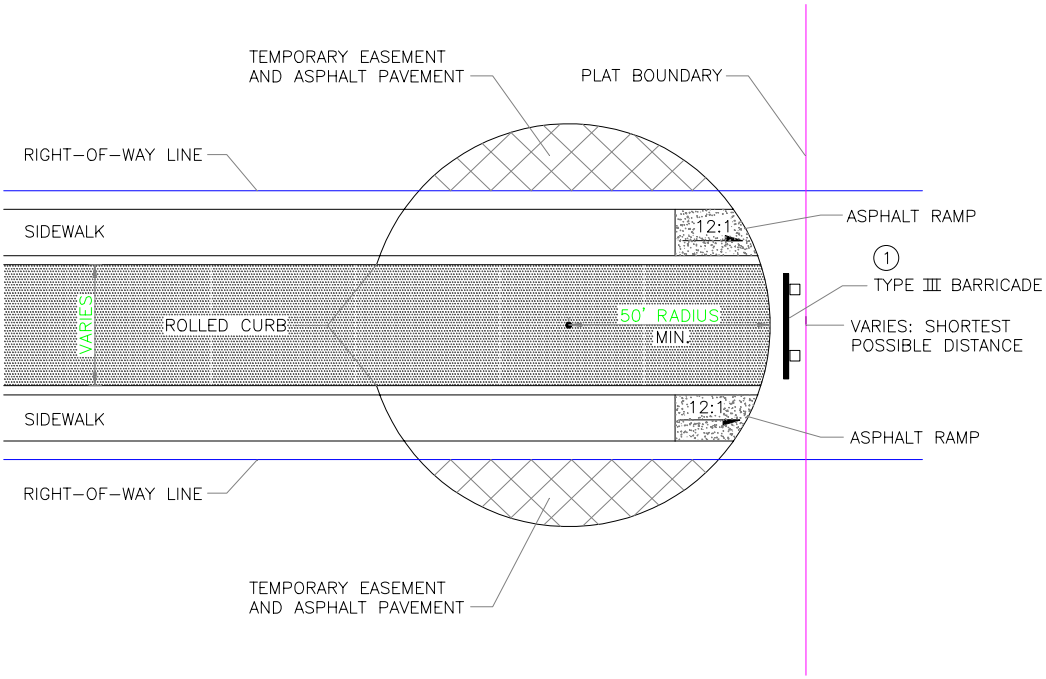

NOTES

1. BARRICADE REQUIRED AT END OF BULB. SEE SEC. 5.07.
2. ON COLLECTOR ROADS, THE SIDEWALK SHALL NOT BE EXTENDED THRU THE TEMPORARY CUL-DE-SAC.

CONSTRUCTION STANDARDS CITY OF POLSON	TEMPORARY CUL-DE-SACS	SD-19

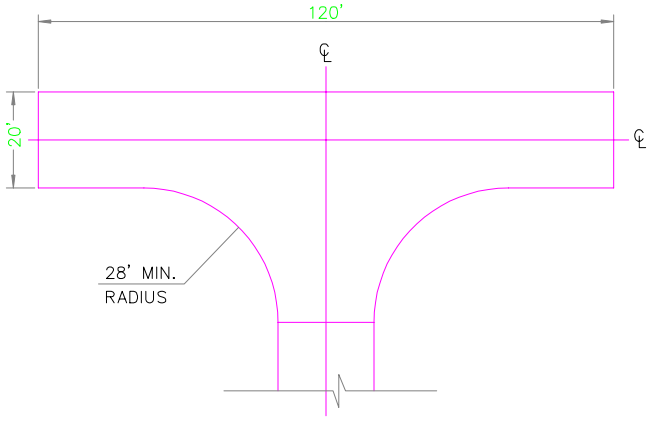

HAMMERHEAD

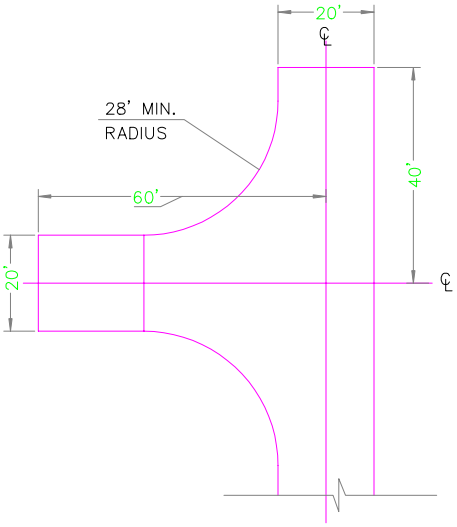

OFFSET HAMMERHEAD

NOTES

1. SIDEWALKS AND UTILITIES MAY BE LOCATED WITHIN PUBLIC EASEMENTS.
2. ALTERNATIVE DESIGNS BY APPROVAL OF THE CITY AND FIRE MARSHAL.
3. TURNAROUND FACILITIES CANNOT BE LOCATED ON DRIVEWAYS.
4. ALL STREET ENDS SHALL BE SIGNED PER THE MUTCD.

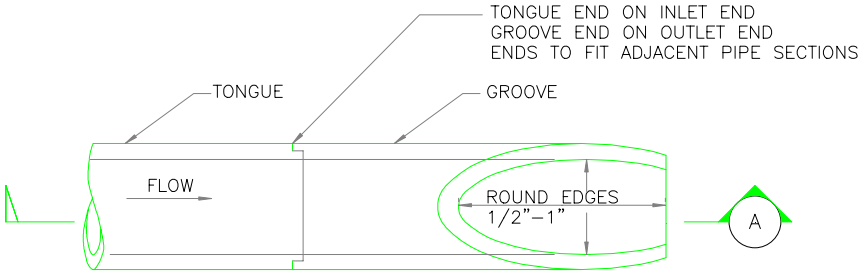

PLAN

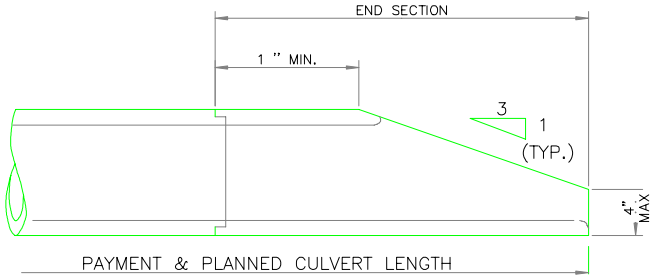

ELEVATION

CONCRETE PIPE

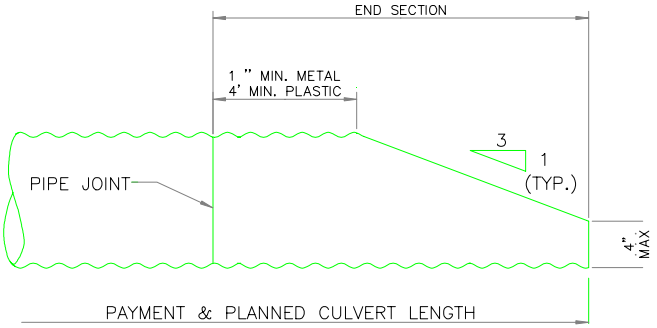

METAL & PLASTIC PIPE

NOTES:

1. SIDE SLOPE SHALL BE WARPED TO MATCH THE BEVELED PIPE END.
2. PIPE SHALL BE BEVELED TO MATCH SLOPE IF SLOPE DIFFERS FROM 3:1.
3. PIPE SHALL BE ROTATED TO CONFORM TO SLOPE WHEN ON SKEW.

CONSTRUCTION STANDARDS CITY OF POLSON	STANDARD BEVELED END PIPE SECTION	SD–21

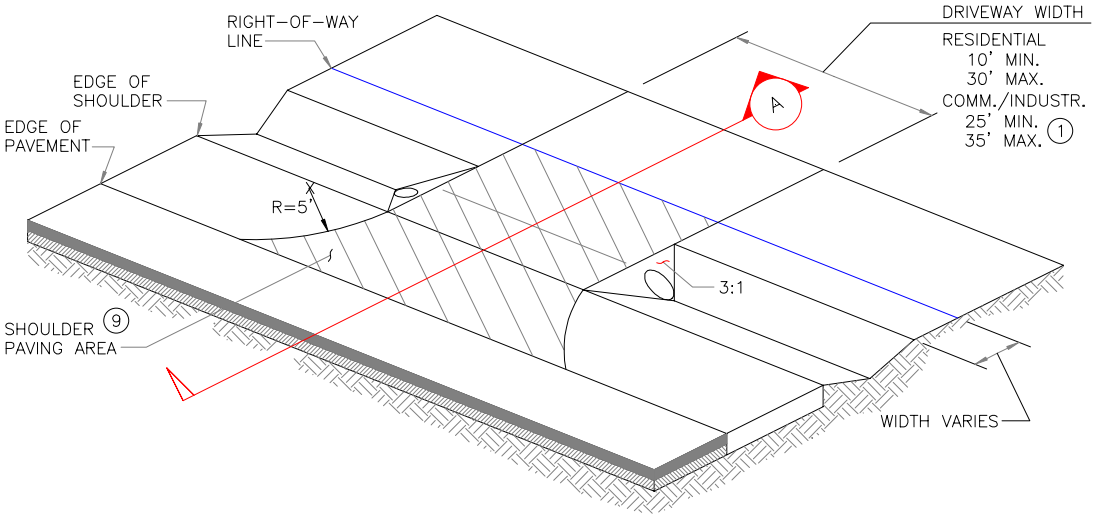

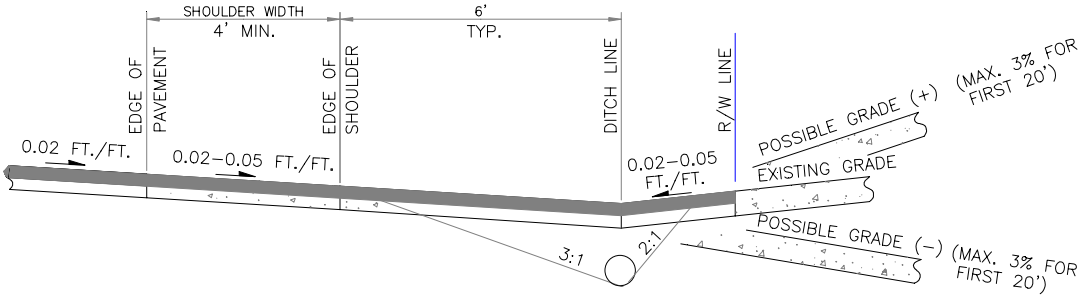

SECTION A-A

NOTES

1. WITHIN THE RIGHT-OF-WAY DRIVEWAYS SHALL BE PAVED FROM THE RIGHT-OF-WAY LINE TO THE EDGE OF PAVEMENT.

2. COMMERCIAL/INDUSTRIAL DRIVEWAYS WIDER THAN 35 FT. MAY BE APPROVED BY THE CITY CONSIDERING BOTH TRAFFIC SAFETY AND THE ACTIVITY BEING SERVED. ALL COMMERCIAL/INDUSTRIAL DRIVEWAYS SHALL HAVE AN EXPANSION JOINT LOCATED MID-WIDTH.

3. PIPE SHALL BE:
   A. SIZED TO CONVEY COMPUTED STORM WATER RUNOFF, AND
   B. MIN. 12" DIAM., AND
   C. EQUAL TO OR LARGER THAN EXISTING PIPES WITHIN
   D. CAPABLE OF SUPPORTING 4,000 lbs.

4. EXPOSED PIPE ENDS SHALL BE BEVELED TO MATCH THE SLOPE FACE AND PROJECT NO MORE THAN 2" BEYOND SLOPE SURFACE. PROJECTING HEADWALLS ARE NOT ACCEPTABLE.

5. ALL TYPES OF PIPE SHALL HAVE MIN. 12" COVER TO FINISH GRADE.

6. PIPE SHALL BE INSTALLED IN A STRAIGHT UNIFORM ALIGNMENT AT A MIN. 0.5% SLOPE (0.5 FT. PER 100 FT.) WITH THE DOWNSTREAM END LOWER THAN THE UPSTREAM END.

7. PIPE MAY BE OMITTED IF ROADSIDE DITCH DOES NOT EXIST AND DRIVEWAY DOES NOT BLOCK NATURAL FLOW.

8. DRIVEWAY SLOPE SHALL MATCH TO BACK EDGE OF SHOULDER, BUT SHOULDER SLOPE AND EDGE OF SHOULDER SHALL NOT BE ALTERED AS A RESULT OF DRIVEWAY CONSTRUCTION.

9. GRAVEL DRIVEWAYS SHALL BE PAVED BETWEEN THE EDGE OF PAVEMENT AND R/W WITH ONLY WITH DIMENSIONS L=W.

10. PIPING OF DITCHES SHALL BE ALLOWED ONLY WHERE DRIVEWAY ACCESS IS NECESSARY.

CONSTRUCTION STANDARDS CITY OF POLSON	STANDARD SHOULDER AND DITCH SECTION DRIVEWAY	SD-22

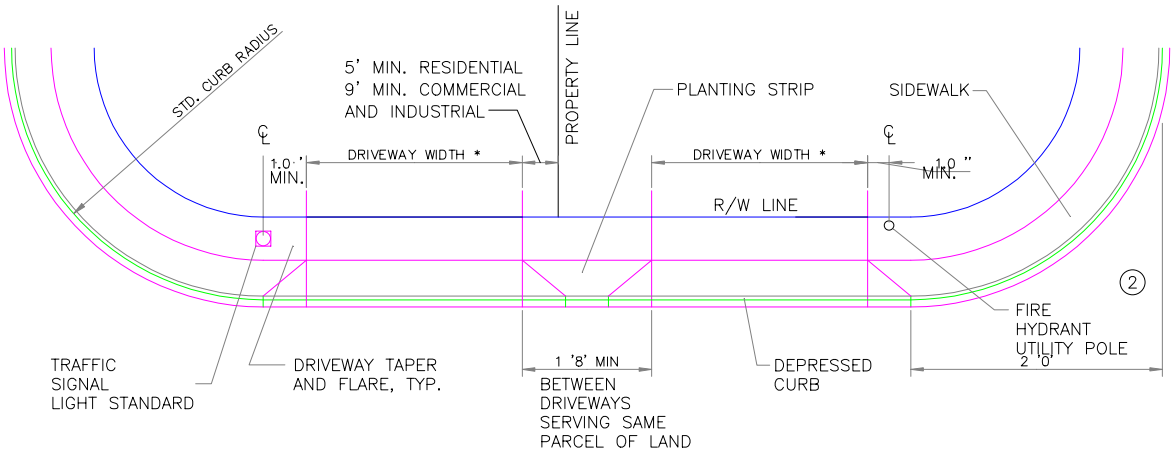

* RESIDENTIAL 10' MIN., 30' MAX.
COMMERCIAL/INDUSTR. 25' MIN. 35' MAX.,
EXCEPT ONE-WAY 20' MIN.

NOTES

1. NO PORTION OF ANY DRIVEWAY SHALL ENCROACH IN CURB RETURN.
2. DRIVEWAYS SHALL BE LOCATED AS FAR FROM THE INTERSECTION AS POSSIBLE.
3. COMMERCIAL/INDUSTRIAL DRIVEWAYS WIDER THAN 35 FT. MAY BE APPROVED BY THE CITY CONSIDERING TRAFFIC SAFETY AND NEEDS OF THE ACTIVITY SERVED.
   ALL COMMERCIAL/INDUSTRIAL DRIVEWAYS SHALL HAVE AN EXPANSION JOINT LOCATED MID-WIDTH. (SEE SEC. 3.04)

CONSTRUCTION STANDARDS CITY OF POLSON	STANDARD LOCATION AND WIDTH OF NEW DRIVEWAYS	SD-23

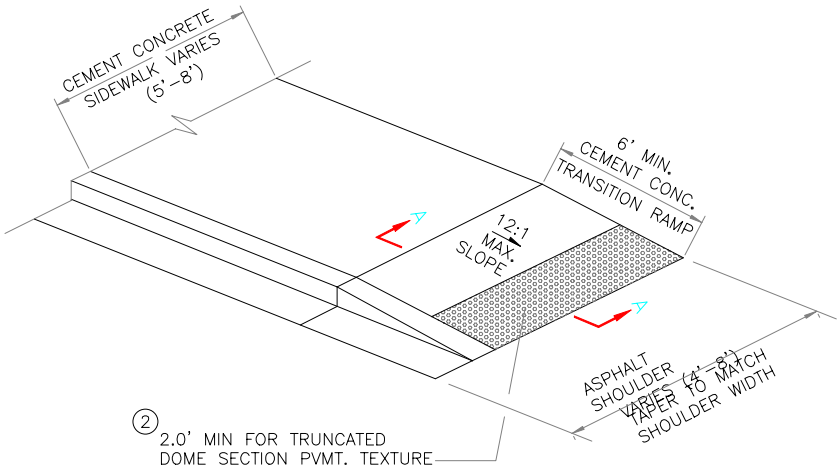

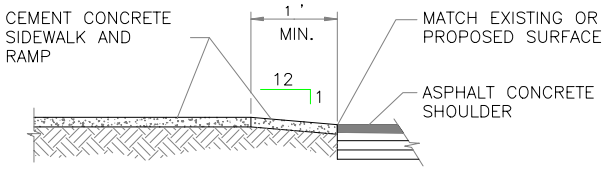

SECTION A–A

NOTES

1. SHOULDER SHALL BE SURFACED AS REQUIRED. PAVED SHOULDER SLOPE SHALL MATCH CROWN SLOPE OR 0.02 FT./FT.

2. RAMP SHALL BE TEXTURED USING TRUNCATED DOME PATTERN. DETECTABLE WEARING PATTERN SHALL BE YELLOW IN COMPLIANCE WITH MDT $ ADA SPECIFICATIONS.

3. THIS DETAIL APPLIES TO ROLLED AND VERTICAL CURB ROADWAYS.

CONSTRUCTION STANDARDS CITY OF POLSON	CEMENT CONCRETE SIDEWALK TRANSITION TO ASPHALT SHOULDER	SD–24

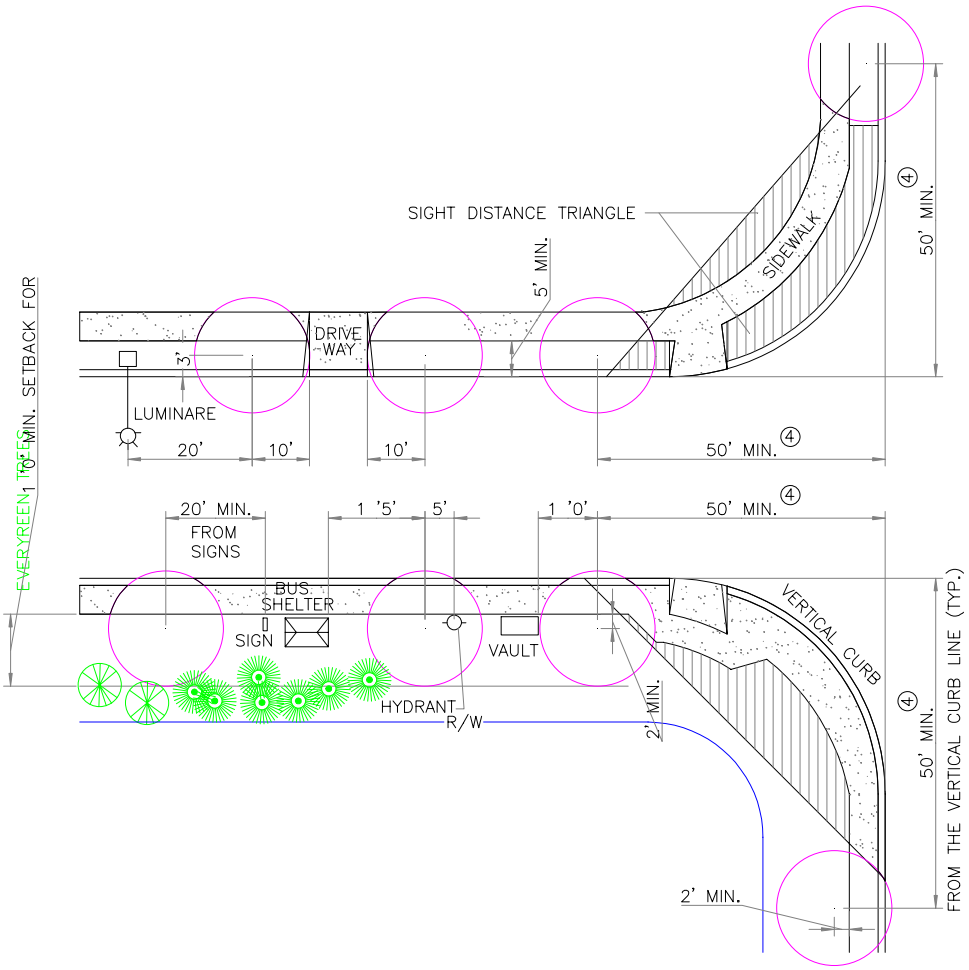

NOTES:

1. TREES SHALL GENERALLY BE PLANTED BACK OF THE SIDEWALK. PLANTING BUFFERS WILL BE APPROVED ONLY AS PART OF A LANDSCAPING PLAN IN WHICH PLANT MAINTENANCE, COMPATIBILITY WITH UTILITIES, AND TRAFFIC SAFETY ARE DULY CONSIDER FOUR MAJOR TREES SHALL BE PLANTED, PER SIDE, PER. 100 LINEAL FEET WHEN REQUIRED BY THE PDC APPENDIX FRACTION 3.

2. IF PLANTING STRIPS ARE APPROVED:
   A) MIN. DISTANCE FROM CENTER OF ANY TREE TO FACE OF VERTICAL CURB SHALL BE 3 FT.
   B) TREES SHALL BE STAKED IN A MANNER NOT TO OBSTRUCT SIDEWALK TRAFFIC.
   C) MINIMUM CLEAR SIDEWALK WIDTH SHALL BE 5 FT. IN RESIDENTIAL OR 8 FT. IN BUSINESS DISTRICTS WHERE BLOCK-OUTS OCCUR.

3. NO TREES WITH MATURE TRUNKS GREATER THAN 4 IN. DIAMETER (AS MEASURED AT GRADE) SHALL BE PLANTED WITHIN 10 FEET OF FAC-OF-CURB ON DESIGNATED ARTERIAL STREETS. LARGER TREES MAY BE APPROVED FOR PLANTING OUTSIDE THE CLEAR ZONE AREA. NO TREES HALL BE PLANTED WITHIN THE SIGHT DISTANCE TRIANGLE AT INTERSECTIONS. ALL PLANTINGS SHALL HAVE A MATURE HEIGHT LESS THAN 30" AS MEASURED FROM GUTTER FLOW LINE.

④ WHEN INTERSECTING ARTERIAL STREETS, THIS DISTANCE SHALL BE 65' MIN.

CONSTRUCTION STANDARDS CITY OF POLSON	STANDARD STREET TREE LOCATION	SD-25

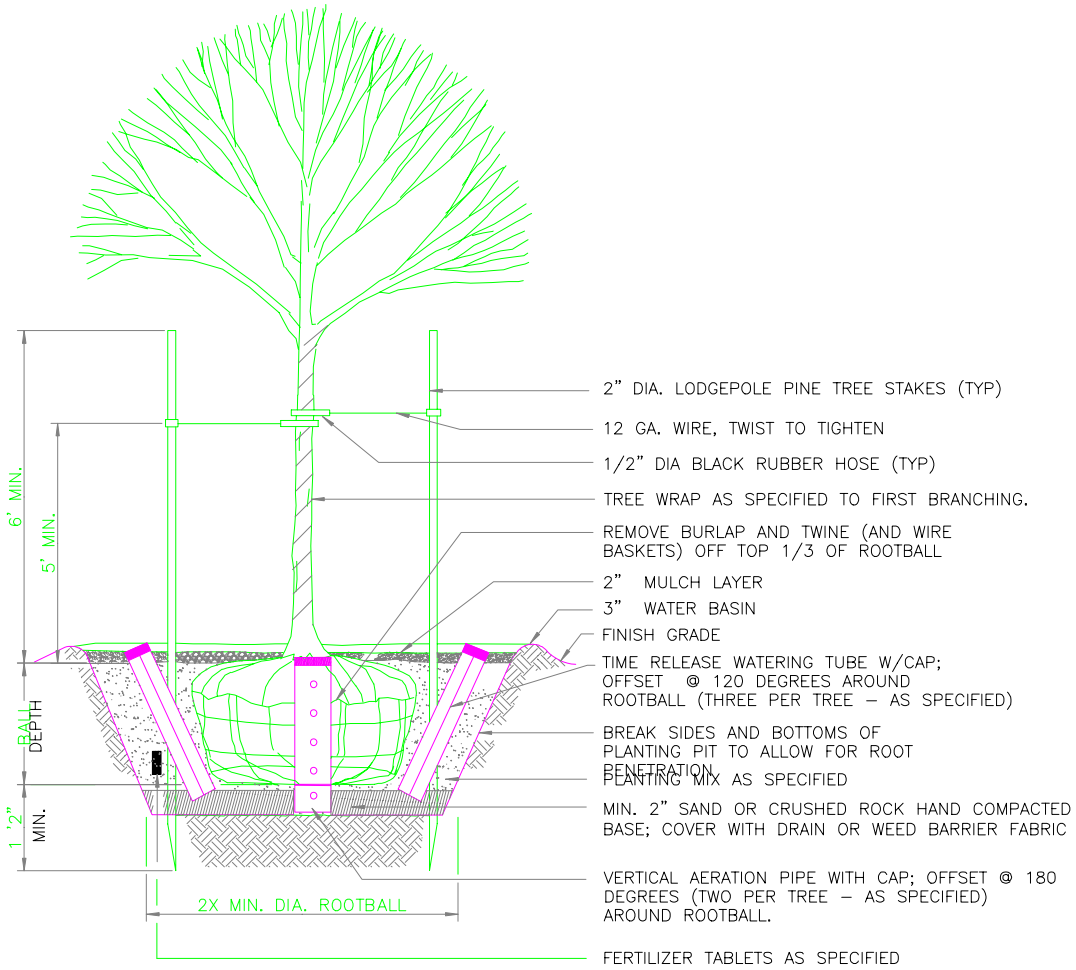

N.T.S.

NOTES:

1. PLANT TREES 1 IN. HIGHER THAN DEPTH GROWN IN NURSERY. TREE PIT SHALL NOT BE LESS THAN (2) TIMES DIAMETER OF ROOTBALL.
2. ROOTBARRIER SHALL BE 12 IN. DEEP AND 8 L.F. ON EACH SIDE OF ROOTBALL ADJACENT TO CURBS AND PAVED SURFACES.
3. THERE SHALL BE A MINIMUM ROOTBALL DIAMETER OF 10 IN. PER TRUNK CALIPER INCH AS MEASURED 6 IN. ABOVE ROOTBALL.

CONSTRUCTION STANDARDS CITY OF POLSON	STANDARD TREE PLANTING IN PLANTING STRIPS	SD–26

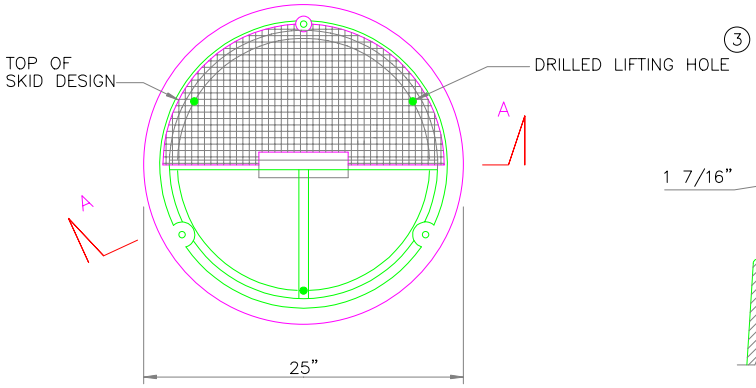

PLAN

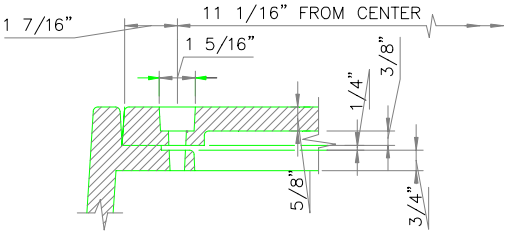

BOLT-DOWN DETAIL

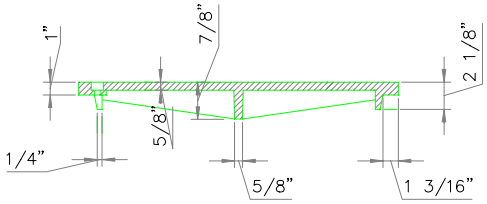

SECTION A-A

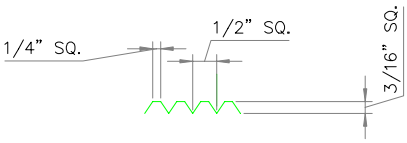

COVER SKID DESIGN DETAIL

NOTES:

1. USE WITH THREE LOCKING BOLTS 5/8 IN.-11 NC STAINLESS TYPE 304 STEEL SOCKET HEAD (ALLEN HEAD) CAP SCREWS 2 IN. LONG. DRILL HOLES SPACED 120° AT 11 1/16 IN. RADIUS.

2. MATERIAL IS DUCTILE IRON ASTM A536 GRADE 80-55-06

3. DRILL THREE 1 IN. HOLES SPACED AT 120° AND 9 1/2 IN. RADIUS.

CONSTRUCTION STANDARDS CITY OF POLSON	STANDARD LOCKING MANHOLE COVER	SD-27

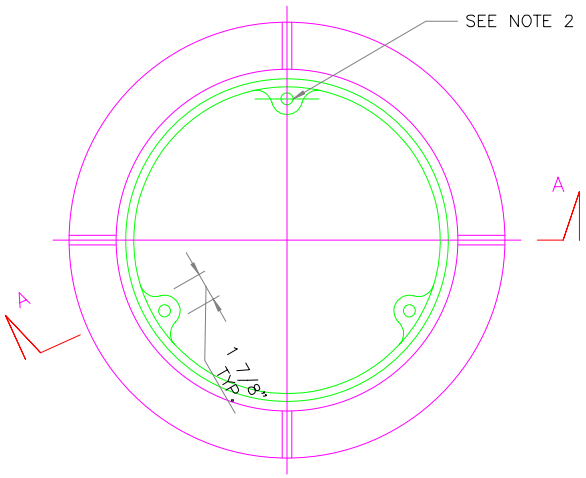

PLAN

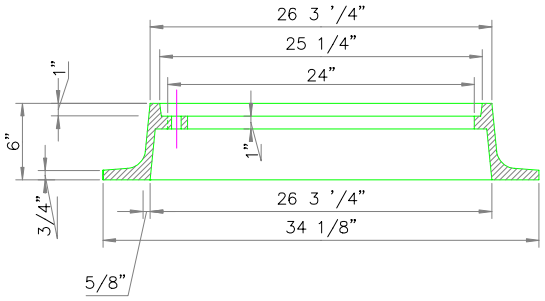

SECTION A–A

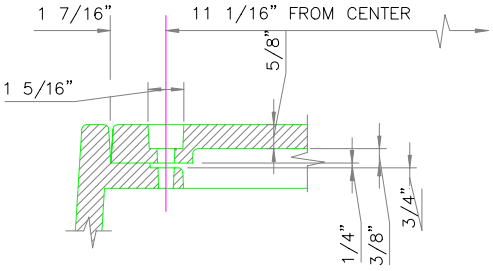

BOLT–DOWN DETAIL

NOTES:

1. MATERIAL IS CAST IRON ASTM A48 CLASS 30.

2. DRILL AND TAP THREE 5/8 IN.–11 NC HOLES THROUGH FRAME AT 120° AND 11 1/16 IN. RADIUS.

CONSTRUCTION STANDARDS CITY OF POLSON	STANDARD LOCKING MANHOLE FRAME	SD–28

TYPE "A" LAYOUT 1

DIAGONAL PUBLIC CURBSIDE SIDEWALK CURB RAMPS
(FOR RADIUS 20 FEET OR GREATER)

CROSS-SECTION B – B CONSTRUCTS
A CURB RAMP WITH LANDING AS SHOWN

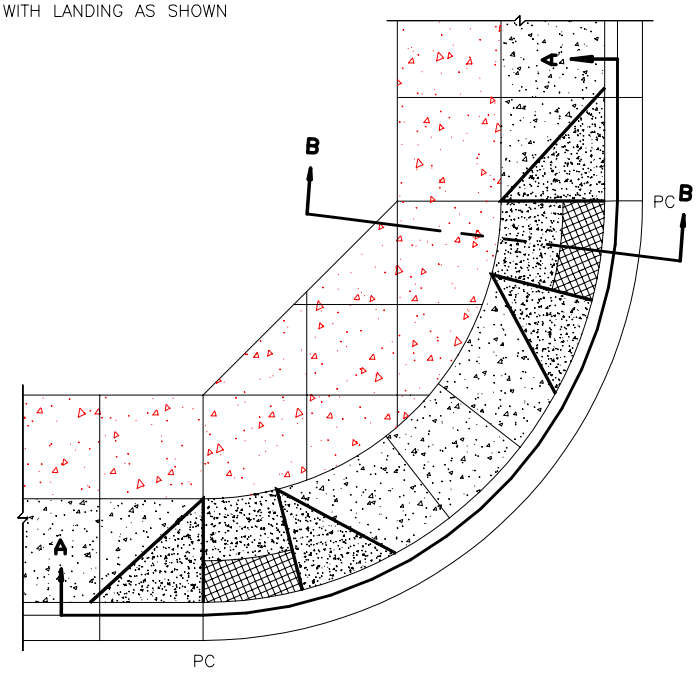

DETECTABLE (TACTILE) WARNING

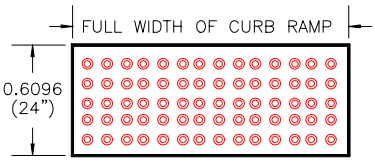

DETECTABLE (TATCTILE) WARNING ARE FULL WIDTH OF THE CURB RAMP BY TWO (2') FEET IN LENGTH, MEASURED FROM THE BACK OF THE CURB.
SEE CURRENT ADA GUIDELINES FOR TRUNCATED DOME SPECIFICATIONS.
CITY ENGINEERING DIVISION APPROVAL REQUIRED PRIOR TO INSTALLATION.

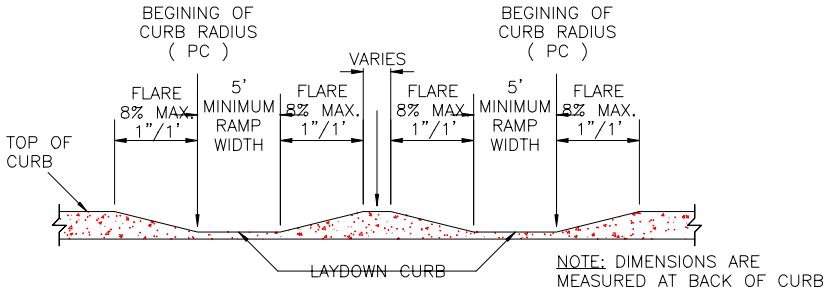

NOTE: DIMENSIONS ARE MEASURED AT BACK OF CURB

SECTION A–A

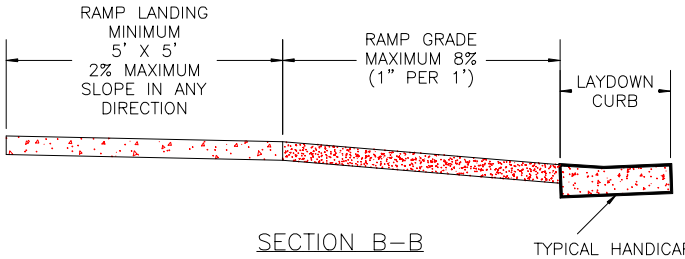

SECTION B–B

TYPICAL HANDICAP RAMP
LAYDOWN DRAWING STD–126

NOTES:

1. CURB RAMP LANDINGS ARE FIVE (5') FEET BY FIVE (5') FEET.
2. DETECTABLE (TACTILE) WARNING ARE FULL WIDTH OF THE CURB RAMP BY TWO (2') FEET IN LENGTH, MEASURED FROM THE BACK OF THE CURB.
3. WHERE EXISTING SITE DEVELOPMENT CONDITIONS PROHIBIT THE STRICT AND FULL COMPLIANCE OF ALL ADA CRITERIA, ACCESSIBILITY MUST BE PROVIDED TO THE MAXIMUM EXTENT FEASIBLE.

TYPE "A" MOD 2

SINGLE DIAGONAL PUBLIC CURBSIDE SIDEWALK CURB RAMP
(FOR RADII LESS THAN 15 FT.)

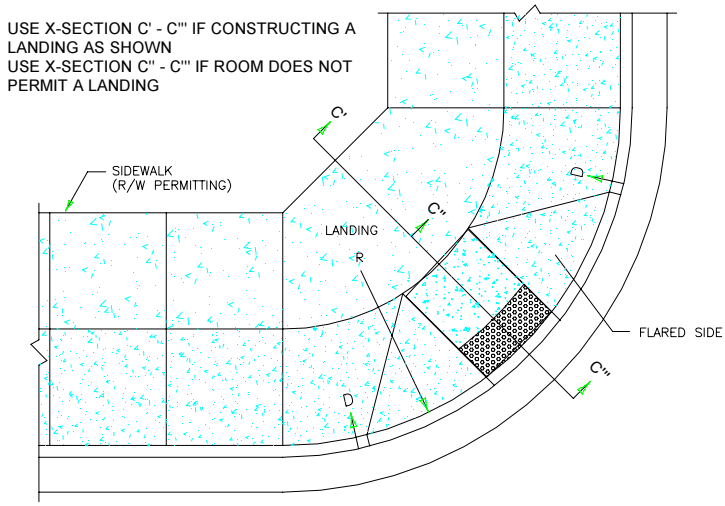

DETECTABLE (TACTILE) WARNING

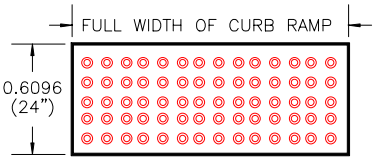

DETECTABLE (TATCTILE) WARNING ARE FULL WIDTH OF THE CURB RAMP BY TWO (2') FEET IN LENGTH, MEASURED FROM THE BACK OF THE CURB.
SEE CURRENT ADA GUIDELINES FOR TRUNCATED DOME SPECIFICATIONS.
CITY ENGINEERING DIVISION APPROVAL REQUIRED PRIOR TO INSTALLATION.

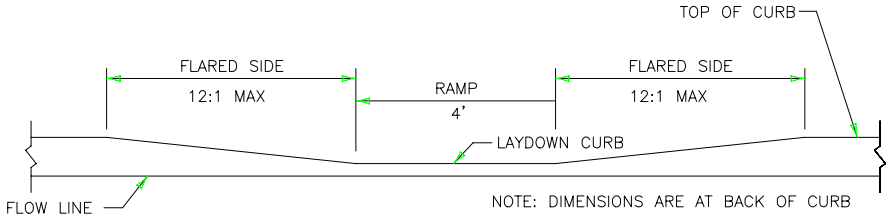

SECTION D–D
(R LESS THAN 15')

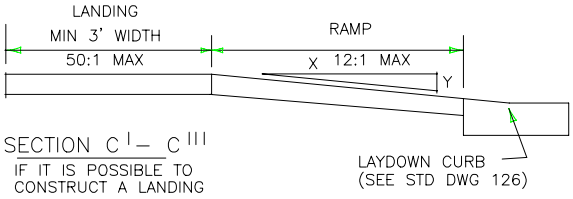

SECTION C'– C'''
IF IT IS POSSIBLE TO CONSTRUCT A LANDING

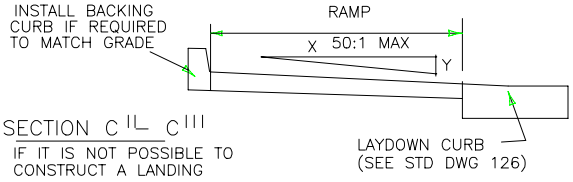

SECTION C''– C'''
IF IT IS NOT POSSIBLE TO CONSTRUCT A LANDING

NEW CONSTRUCTION:

1. THE STANDARD LANDING WIDTH IS 4 FEET. THE MINIMUM LANDING WIDTH IS 3 FEET.

2. THE SURFACE OF THE PUBLIC SIDEWALK RAMP TO CONTRAST VISUALLY WITH THE ADJOINING PUBLIC SIDEWALK SURFACES. THIS CAN BE OBTAINED BY USE OF COLORED CONCRETE, PATTERNING THE CONCRETE SURFACE, OR OTHER APPROVED METHODS UNLESS OTHERWISE SPECIFIED

3. WHERE EXISTING SITE DEVELOPMENT CONDITIONS PROHIBIT THE STRICT AND FULL COMPLIANCE OF ALL ADA CRITERIA, PROVIDE ACCESSIBILITY TO THE MAXIMUM EXTENT FEASIBLE.

TYPE "D" MOD 1

DIAGONAL PUBLIC BOULEVARD SIDEWALK CURB RAMPS

(FOR RADII 15 FT. OR GREATER)

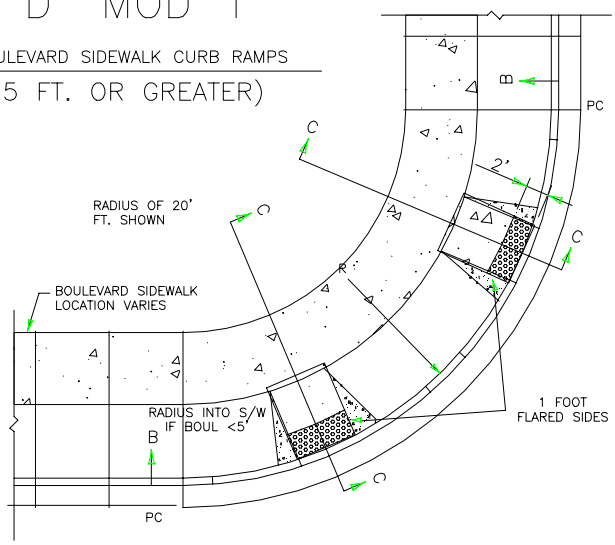

DETECTABLE (TACTILE) WARNING

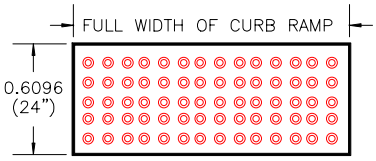

DETECTABLE (TATCTILE) WARNING ARE FULL WIDTH OF THE CURB RAMP BY TWO (2') FEET IN LENGTH, MEASURED FROM THE BACK OF THE CURB.
SEE CURRENT ADA GUIDELINES FOR TRUNCATED DOME SPECIFICATIONS.
CITY ENGINEERING DIVISION APPROVAL REQUIRED PRIOR TO INSTALLATION.

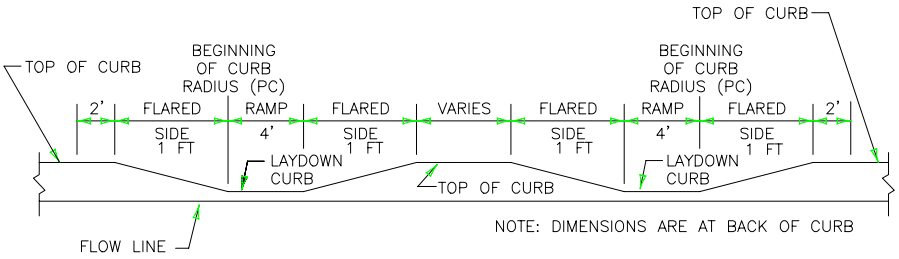

SECTION B–B

(R EQUAL TO OR GREATER THAN 15', BUT LESS THAN 25')

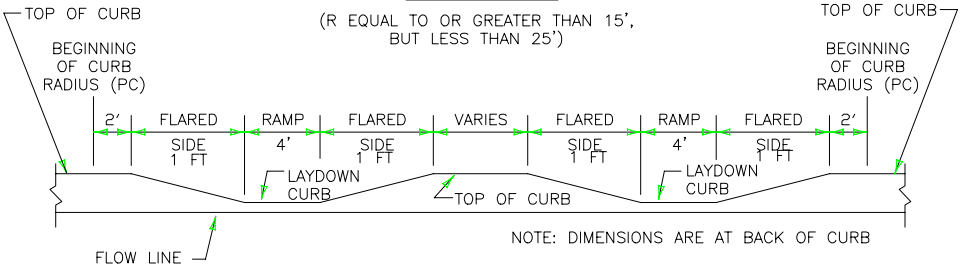

SECTION B–B

(R EQUAL TO OR GREATER THAN 25')

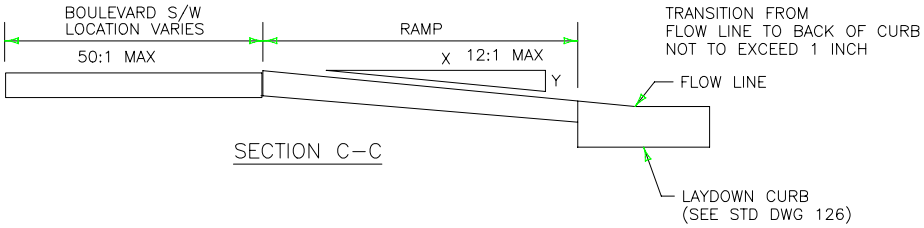

SECTION C–C

NEW CONSTRUCTION:

1. THE STANDARD LANDING LENGTH IS 4 FEET. THE MINIMUM LANDING LENGTH IS 3 FEET.

2. THE SURFACE OF THE PUBLIC SIDEWALK RAMP TO CONTRAST VISUALLY WITH THE ADJOINING PUBLIC SIDEWALK SURFACES. THIS CAN BE OBTAINED BY USE OF COLORED CONCRETE, PATTERNING THE CONCRETE SURFACE, OR OTHER APPROVED METHODS UNLESS OTHERWISE SPECIFIED.

3. WHERE EXISTING SITE DEVELOPMENT CONDITIONS PROHIBIT THE STRICT AND FULL COMPLIANCE OF ALL ADA CRITERIA, PROVIDE ACCESSIBILITY TO THE MAXIMUM EXTENT FEASIBLE.

TYPE "D" MOD 2

SINGLE DIAGONAL PUBLIC BOULEVARD SIDEWALK CURB RAMP
(FOR RADII LESS THAN 15 FT.)

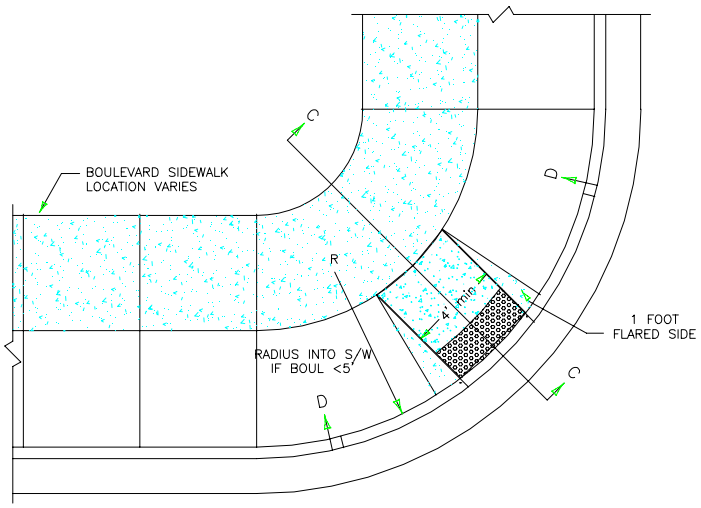

DETECTABLE (TACTILE) WARNING

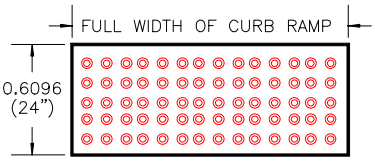

DETECTABLE (TATCTILE) WARNING ARE FULL WIDTH OF THE CURB RAMP BY TWO (2') FEET IN LENGTH, MEASURED FROM THE BACK OF THE CURB.
SEE CURRENT ADA GUIDELINES FOR TRUNCATED DOME SPECIFICATIONS.
CITY ENGINEERING DIVISION APPROVAL REQUIRED PRIOR TO INSTALLATION.

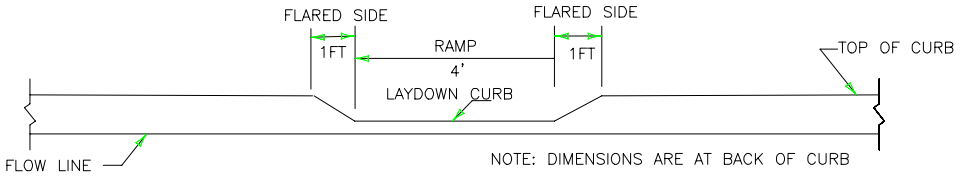

SECTION D-D
(R LESS THAN 15')

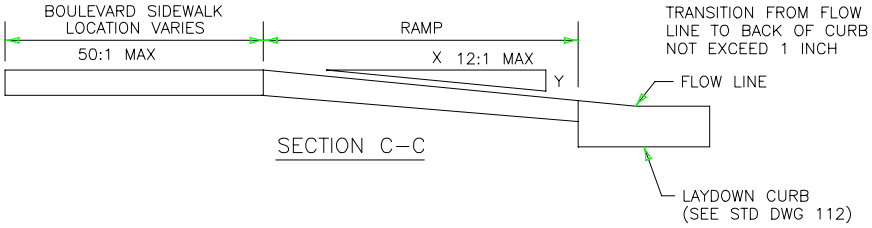

SECTION C-C

NEW CONSTRUCTION:

1. THE STANDARD LANDING LENGTH IS 4 FEET. THE MINIMUM LANDING LENGTH IS 3 FEET.

2. THE SURFACE OF THE PUBLIC SIDEWALK RAMP TO CONTRAST VISUALLY WITH THE ADJOINING PUBLIC SIDEWALK SURFACES. THIS CAN BE OBTAINED BY USE OF COLORED CONCRETE, PATTERNING THE CONCRETE SURFACE, OR OTHER APPROVED METHODS UNLESS OTHERWISE SPECIFIED.

3. WHERE EXISTING SITE DEVELOPMENT CONDITIONS PROHIBIT THE STRICT AND FULL COMPLIANCE OF ALL ADA CRITERIA, PROVIDE ACCESSIBILITY TO THE MAXIMUM EXTENT FEASIBLE.